Section Contents

Model No.	Page No.
140000	31-2 thru 31-4
140005	31-2 thru 31-4
UD70080	31-2 thru 31-4
UD40275	31-2 thru 31-4
UD40305	31-2 thru 31-4

Model No.

140000
140005
UD40275
UD40305
UD70080

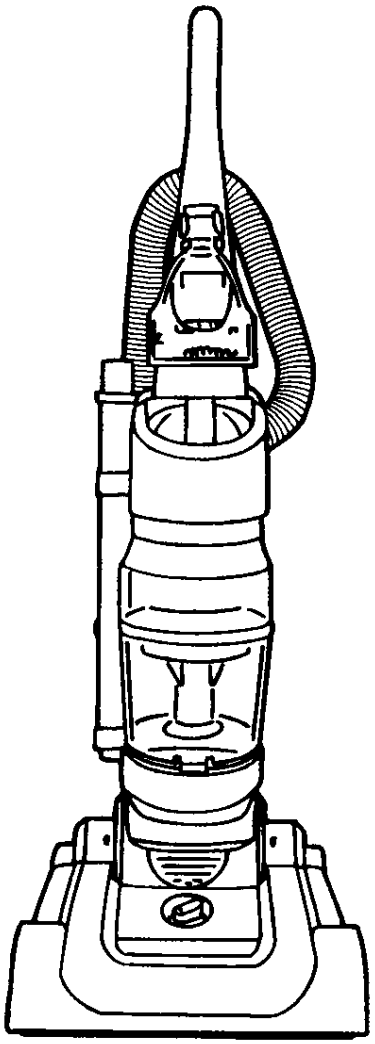

* Pricing, specification's, and product availability are subject to change without notice. Pricing is FOB factory, Glenwillow, OH
* All information contained within this service manual is proprietary information of TTI Floor Care North America.
* **WARNING:** To reduce the risk of electrical shock or injury, always disconnect the appliance cord from the electrical outlet or remove battery prior to servicing the unit.

Assembly Schematic

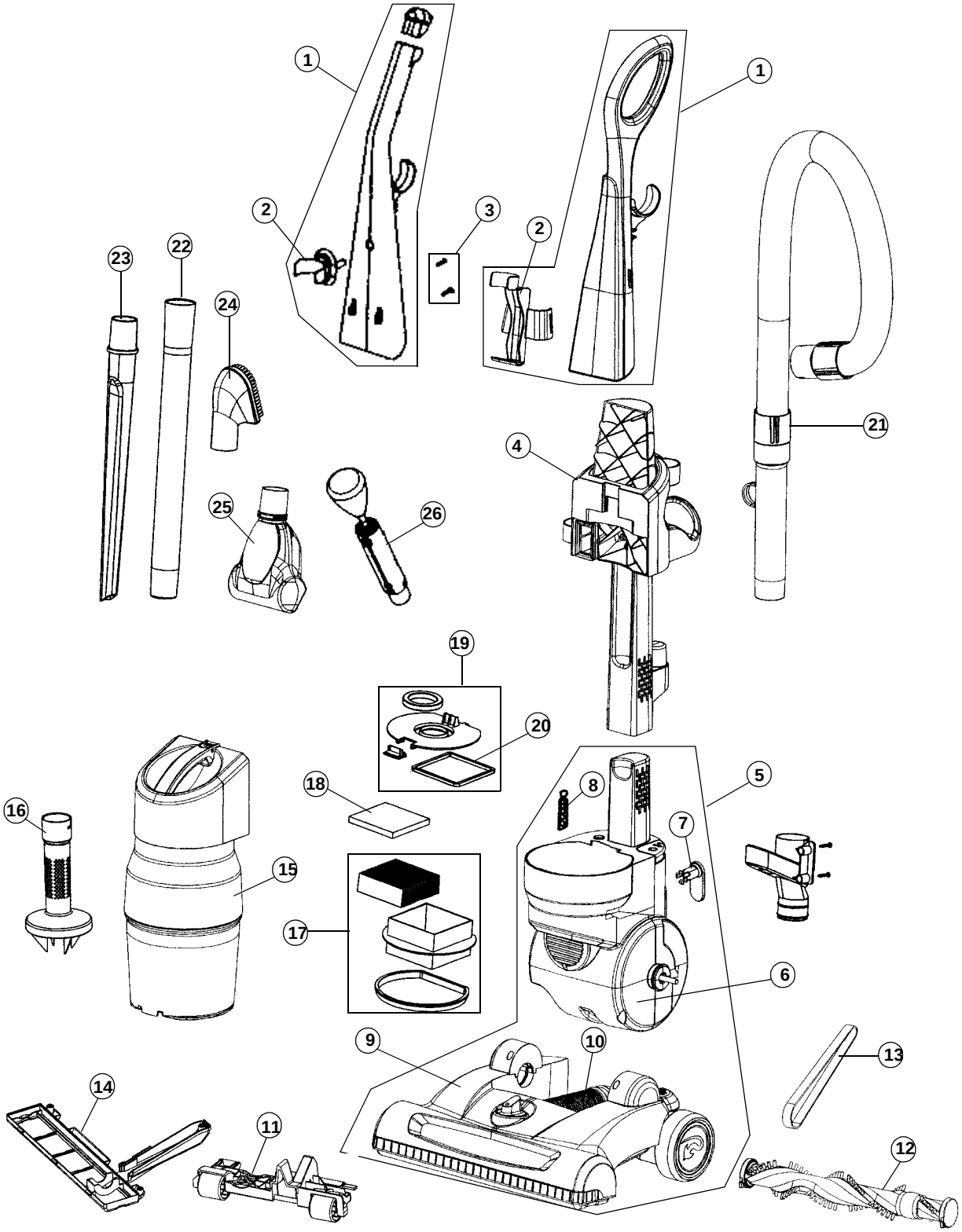

Model No.

140000
140005
UD40275
UD40305
UD70080

PART LISTING / PRICE LIST

Item	Part Number	Models To Fit	Part Description	Net Cost	List Cost
1	2LY2103000	140000	HANDLE ASSEMBLY - BLUE / STRAIGHT	13.47	22.45
	2LY1103000	140005, UD70080	HANDLE ASSEMBLY - RED / STRAIGHT	13.47	22.45
	304467001	UD40275, UD40305	HANDLE ASSEMBLY - RED / D-STYLE	12.24	20.40
2	1LY2102000	140000, 140005 UD70080	TURBO TOOL CLIP - BLACK	1.95	3.25
	520685001	UD40275, UD40305	TURBO TOOL CLIP - RED		
3	2LY2108000	ALL	HANDLE SCREW ASSEMBLY	.10	.17
4	2LY2106000	ALL	BACK PANEL ASSEMBLY	11.52	19.20
5	2LY2105000	140000, 140005	MOTOR WITH MOTOR HOUSING AND NOZZLE ASSEMBLY - RED	59.79	99.65
	304472001	UD40275, UD40305	MOTOR ASSEMBLY	38.34	63.90
		UD70080	MOTOR WITH MOTOR HOUSING		
6	2LY2107000	140000, 140005, UD40275, UD40305	LOWER FRONT MOTOR HOUSING	5.22	8.70
		UD70080	LOWER FRONT MOTOR HOUSING		
7	515710003	ALL	QUICK RELEASE CORD HOOK - GRAY	.16	.27
8	304471001	UD40275, UD40305	PROFORMANCE INDICATOR ASSEMBLY	2.20	3.67
9	2LY2101000	140000	NOZZLE ASSEMBLY - BLUE	20.23	33.72
	1LY1101000	140005, UD70080	NOZZLE ASSEMBLY - RED	39.98	66.63
	304468001	UD40275, UD40305	NOZZLE ASSEMBLY NO LOWER HOSE - RED	20.72	34.53
10	580836003	UD40275, UD40305	LOWER HOSE	1.08	1.80
11	303274001	UD40275, UD40305	ROLLER LIFTER ASSEMBLY	4.24	7.07
12	2LY2102000	140000	BRUSH ROLL ASSEMBLY	7.04	11.73
	2LY1102000	140005, UD70080	BRUSH ROLL ASSEMBLY	6.51	10.85
	302094004	UD40275, UD40305	BRUSH ROLL ASSEMBLY	11.58	19.30
13	1TR0065600	140000, 140005, UD70080	STYLE 22 BELT	1.00	1.67
	561670002	UD40275, UD40305	STYLE 22 BELT	1.92	3.20
14	1LY2101000	140000	NOZZLE GUARD	1.59	2.65
	1LY1102000	140005, UD70080	NOZZLE GUARD	1.59	2.65
	304469001	UD40275, UD40305	NOZZLE GUARD	4.12	6.87
15	2LY2104000	140000	DIRT CUP ASSEMBLY - BLUE **ORDER 2LY2155000**	N.L.A.	N.L.A.
	2LY2155000	140005, UD70080	DIRT CUP ASSEMBLY - RED	26.08	43.47
	301969005	UD40275, UD40305	DIRT CUP ASSEMBLY - RED	28.28	47.13
16	1LY2110000	140000, 140005, UD70080	AIR DIVERTER - RED	3.85	6.42
	515722002	UD40275, UD40305	AIR DIVERTER - RED	5.44	9.07

MODEL NO.

140000
140005
UD40275
UD40305
UD70080

PART LISTING / PRICE LIST

Item	Part Number	Models To Fit	Part Description	Net Cost	List Cost
17	1LY2108000	140000, 140005, UD70080	F-27 PLEATED EXHAUST FILTER **MFG CODE PRIOR TO 6/01/2010**	6.26	10.43
	2LY2208000	140000, 140005, UD70080	F-27 PLEATED EXHAUST FILTER **- REVISED MFG CODE 6/01/2010 AND AFTER**	11.28	18.80
	301973011	UD40275, UD40305	F-27 PLEATED EXHAUST FILTER	8.46	14.10
18	1LY2107000	140000, 140005, UD70080	FOAM EXHAUST FILTER	1.13	1.88
	561845002	UD40275, UD40305	FOAM EXHAUST FILTER	.60	1.00
19	1LY2100000	140000, 140005, UD70080	EXHAUST FILTER COVER LID - BLACK	2.40	4.00
	304470001	UD40275, UD40305	EXHAUST FILTER COVER LID - CLEAR	3.92	6.53
20	1LY2103000	ALL	EXHAUST FILTER COVER GASKET	.50	.83
21	2LY2140000	140000, 140005, UD70080	UPPER HOSE ASSEMBLY	8.31	13.85
	301975002	UD40275, UD40305	UPPER HOSE ASSEMBLY	10.68	17.80
22	1LY2105000	140000, 140005, UD70080	EXTENSION WAND	2.58	4.30
	590768009	UD40275, UD40305	EXTENSION WAND	2.56	4.27
23	1LY2104000	140000, 140005, UD70080	CREVICE TOOL	2.00	3.33
	515362004	UD40275, UD40305	CREVICE TOOL	1.32	2.20
24	1LY2106000	140000, UD40305	UPHOLSTERY TOOL - PET BLUE BRITLES	2.58	4.30
	300840002	140005, UD70080, UD40275	UPHOLSTERY TOOL	1.20	2.00
25	2LY2100000	140000	TURBO TOOL	9.84	16.40
	2LY1101000	140005, UD70080, UD40305	TURBO TOOL - PET **ORDER 2UTT000000**	N.L.A.	N.L.A.
	100437013	UD40275	TURBO TOOL	11.12	18.53
26	2LY1000000	140005	FEATHER DUSTER	N.L.A.	N.L.A.

MODEL NO.

140000
140005
UD40275
UD40305
UD70080

This document was created with Win2PDF available at http://www.daneprairie.com.
The unregistered version of Win2PDF is for evaluation or non-commercial use only.