Robin

Service manual

Model

FL-H7500

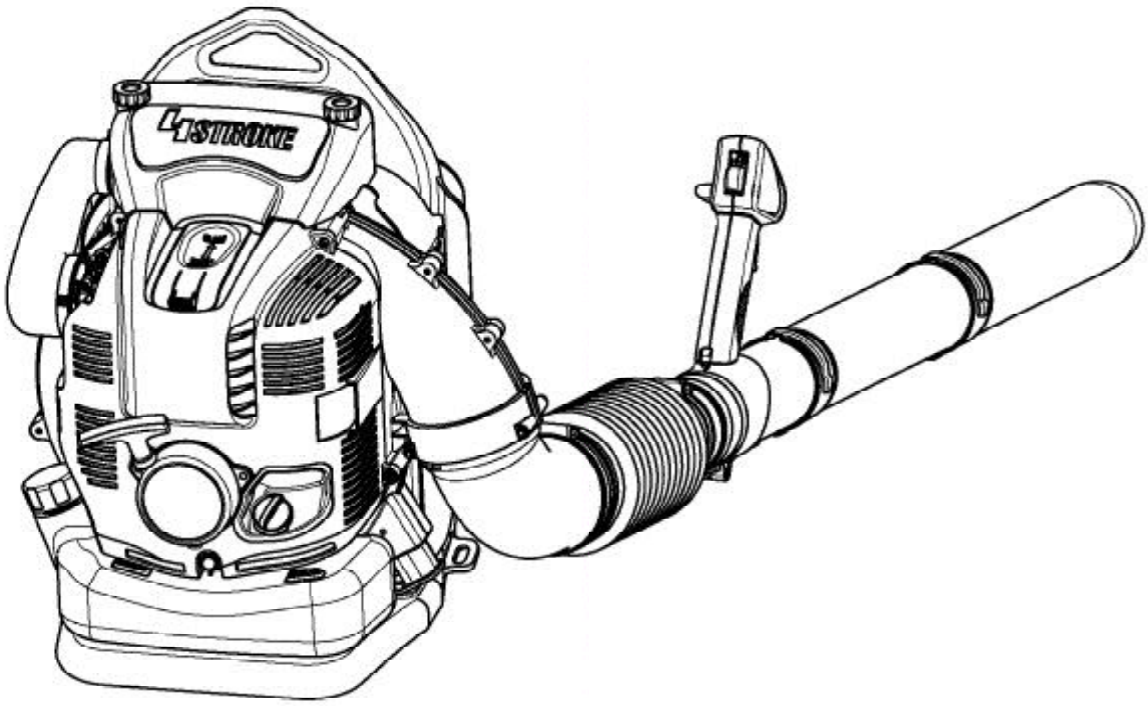

FUJIROBIN INDUSTRIES LTD.

CONTENTS

Ⅰ. SPECIFICATIONS

1.SPECIFICATIONS

SPECIFICATIONS		
Product Name		Engine Blower
Type		FL-H7500
Dimensions(LXWXH) mm		350×430×495（13.7×16.9×19.5in only for body）
Dry Weight kg		10.2（22.4lbs only for body）
Engine	Model	EH075F
	Type	Air-Cooled,4-Stroke,Upright Single-Cylinder OHV Gasoline Engine
	Piston Displacement mL	75.6
	Fuel	Automotive Unleaded Gasoline
	Fuel Tank Capacity L	1.9（64.2 fl.oz）
	Engine Oil	Automotive Oil SAE 10W-30;Class SF or higher (Automotive 4-Stroke Engine Oil)
	Capacity of Engine Oil L	0.22（7.4 fl.oz）
	Carburetor	Diaphragm Type
	Ignition System	Breakerless Magneto
	Spark Plug	NGK CMR6A
	Starting System	Recoil Starter (with decompression)
	Lubrication	Forced Lubrication
Performance	Max Air Volume m^3/min	20.4（720 cfm）
	Air Volume with Nozzle m^3/min	14.1（498 cfm）
Operating Part	Handle	Joystick Lever（with rubber grip）
	Engine Speed Control Lever	Trigger Lever,Cruise Control Lever
Standard Accessories		One Flexible Pipe,One Swivel Pipe,One Blower Pipe,One Blower Nozzle, Two Shoulder Strap,Hose Band φ100,Hose Band φ76, Tool（Box Wrench）,Instruction Manual

2.Part Name

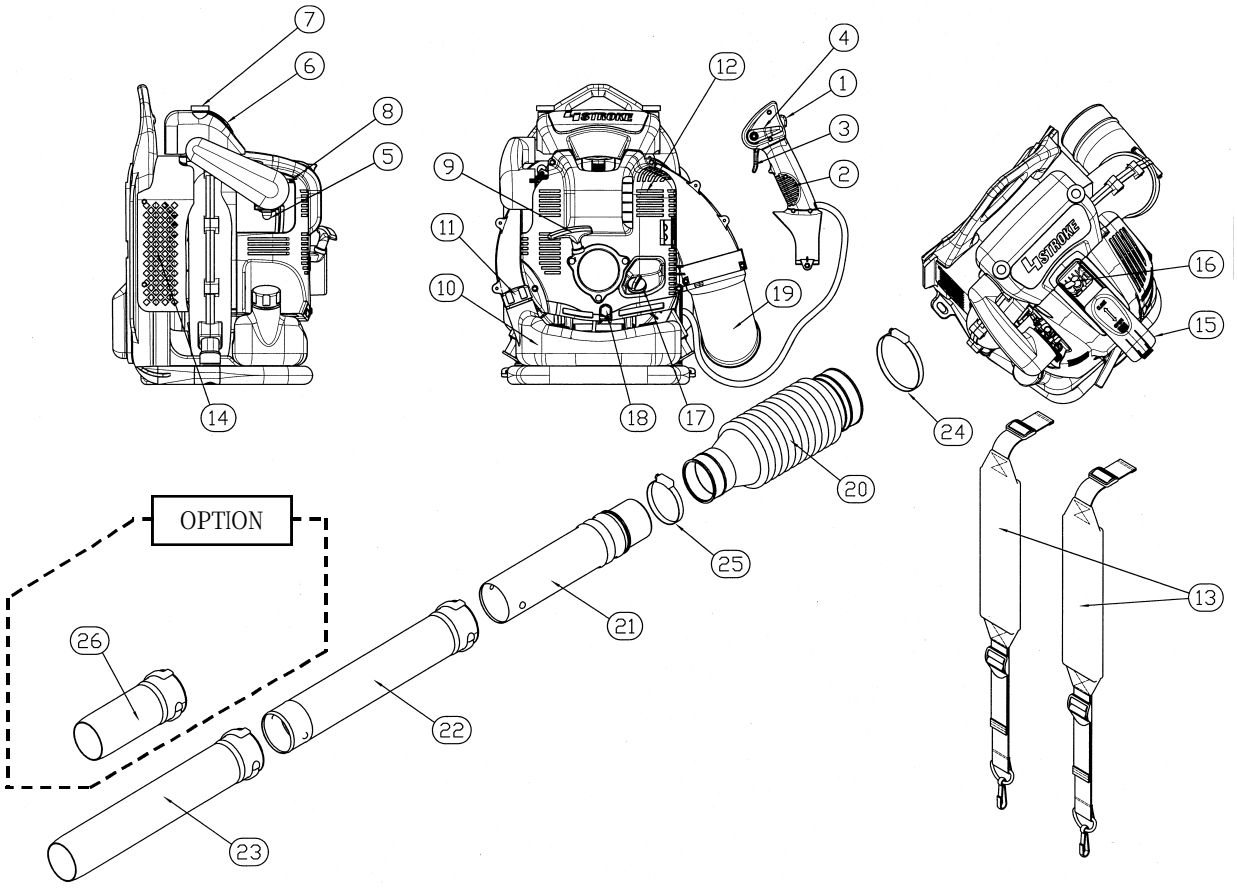

DESIGNATION OF PARTS	DESIGNATION OF PARTS	DESIGNATION OF PARTS	DESIGNATION OF PARTS
1. Stop switch	8. Choke Lever	15. Plug Cover	22. Blower Pipe
2. Control Handle	9. Starter Handle	16. Spark Plug	23. Blower Nozzle L=450
3. Trigger Lever	10. Fuel Tank	17. Oil Cap	24. Hose Band φ100
4. Cruise Control Lever	11. Fuel Tank Cap	18. Oil Drain Bolt	25. Hose Band φ76
5. Primer Pump	12. Muffler	19. Elbow	26. Blower Nozzle L=200
6. Cover Aircleaner	13. Shoulder Strap	20. Flexible Pipe	
7. Knob Bolt	14. Air Inlet Net	21. Swivel Pipe	

Ⅱ. PREPARATIONS

1.PREPARATIONS

(1)Workbench
(2)Tool for disassembly and reassembly
(3)Wash-pan
(4)Wash oil (light oil,gasoline,etc)
(5)Automotive 4-stroke engine oil,grease
(6)Liquid packing
(7)File,sand paper
(8)Waste

2.NOTICE

(1) Use the standard tools properly.
(2) While disassembling the engine blower,memorize the locations of individual parts so that they can be reassembled correctly.
Attach a tag to a part you are uncertain about its mounting position.
(3) Use boxes for keping disassembled parts in a group.
(4) To prevent any loss and wrong reassembly of screw bolts and nuts,try to assemble each group of disassemble parts temporarily.
(5) Handle disassembled parts carefully,and clean them with wash oil.
(6) After removing gaskets,remove extraneous material clearly from the gasket placed palaces.
(7) Use an impact driver for a screw bolt and screw,etc.that are difficult to be unfastened.
(8) Use new gaskets when reassembling.
(9) After reassembling each of the rotatable main parts, rotate by hand to test it for bad movements and abnormal noises.
(10)After the completion of reassembly, rotate the rotatable main parts by hand to test them for defects and looseness.

3.SPECIAL TOOL FOR DISASSEMBLY

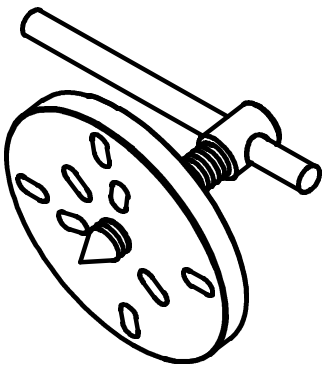

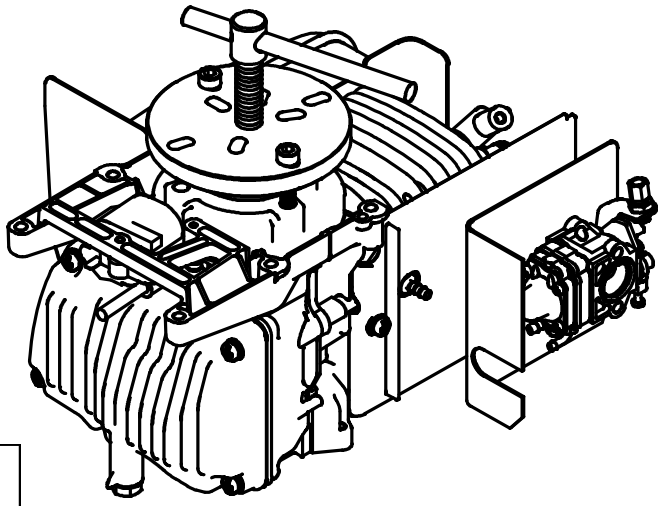

Part number：５９７９００１０００
Tool name ：ＴＯＯＬ
Work：Flywheel Puller

III. DISASSEMBLY AND REASSEMBLY PROCEDURE

1.EQUIPMENT DISASSEMBLY

For further disassembling instructions on each part, see the corresponding pages.

step	Part of remove	Procedure	Fastener	PCS	Notice	Special tool
1	ENGINE OIL For further instructions on the engine oil draining, see page 60.	1)Unscrew the DRAIN,BOLT (5—1) and CAP,OIL(5—2)	M8×12	1	Keep contamination or dust off the DRAIN BOLT and CAP,OIL.	
		2)Drain the ENGINE OIL.				
		3)Screw the DRAIN BOLT and CAP,OIL.				
2	Fuel	1)Drain the fuel.				
3	COVER,AIR CLEANER P9	1)Remove the COVER,AIR CLEANER.	KNOB BOLT	1		
		2)Remove the AIR CLEANER ELEMENT.			Keep contaminant or dust off the AIR CLEANER ELEMENT.	
		3)Remove the DUCT,AIR	HOSE CLAMP			
4	COVER,ENGINE P10	1)Remove the GUARD,OIL.				
		2)Remove the STARTER.	M5×20mm	3		
		3)Remove the COVER,ENGINE	5X16mm	4		
5	TANK,FUEL P10	1)Remove the fuel tube.			The fuel will spout if the fuel tube is removed with the fuel tank filled with fuel.	
		2)Remove the TANK,FUEL.	M6X12mm	2		
6	LEVER(WIRE&CABLE) P11	1)Remove the WIRE.				
		2)Remove the CONTOROL CABLE.				
6-1	LEVER P14	1)Remove the LEVER 1 and LEVER 2 ASSY.	4X16mm	5		
			M5×25mm	1		
		2)Remove the THROTTLE LEVER 2 from the LEVER 2 ASSY.	M6×14mm	1		
7	CASE,AIR CLEANER P11	1)Remove the CASE,AIR CLEANER	M5×16mm	4		
7-1	BLEAHER(AIR CLEANER) P11	1)Remove the PLATE,SEPARETOR.			Be sure to pull the PLATE,SWPARATOR by its body.	
		2)Remove the PLATE,CHECK VALVE(with CHECK VALVE).				
		3)Remove the CHECK VALVE(1).			Do not let the CHECK VALVE(1) missing.	
8	FRAME P12	1)Remove the SCREW the DAMPER 1 side.	M5×40mm	1		
		2)Remove the FRANGE NUT the DAMPER 2 side.	M5	2		
9	CASE 1,VOLUTE P12	1)Remove the CASE 1,VOLUTE.	5X16mm	9		
			M5×65mm	2		
			M5	2		
		2)Remove the ELBOW.				
		3)Remove the DAMPER 2.				
10	IMPELLER P13	1)Remove the IMPELLER.	M6X45mm	4		
11	ENGINE P13	2)Remove the ENGINE.	M6X30mm	6		

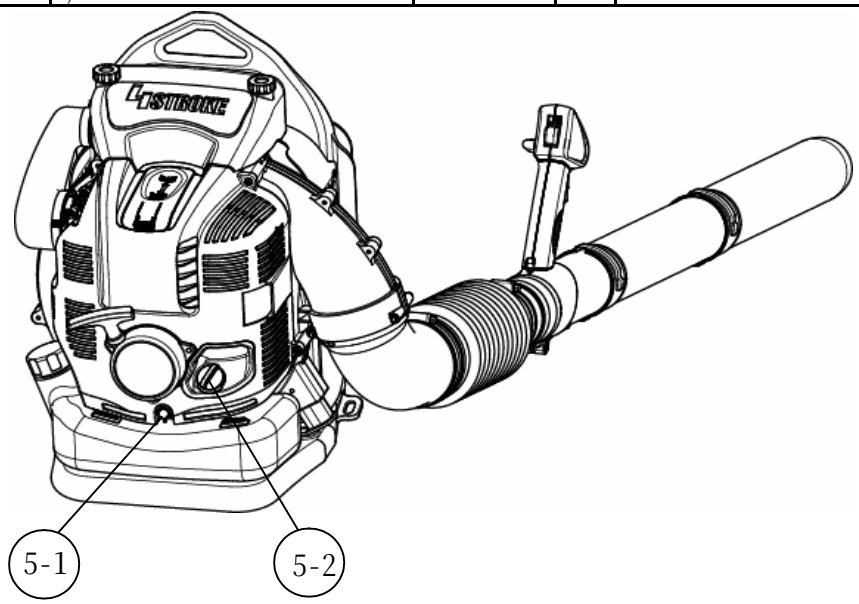

Deal Drawing of Equipment

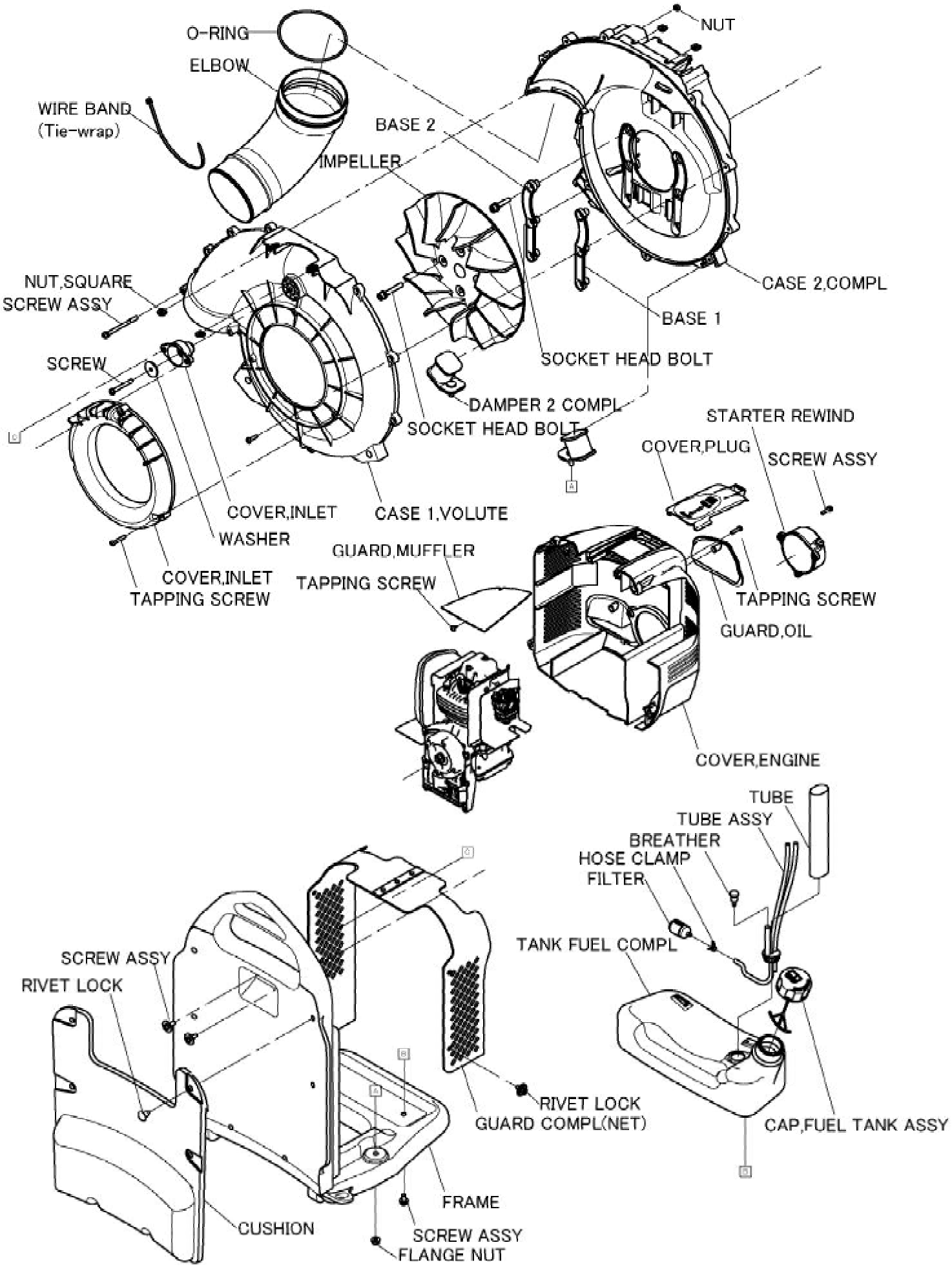

Deal Drawing of Equipment(AIR CLEANER)

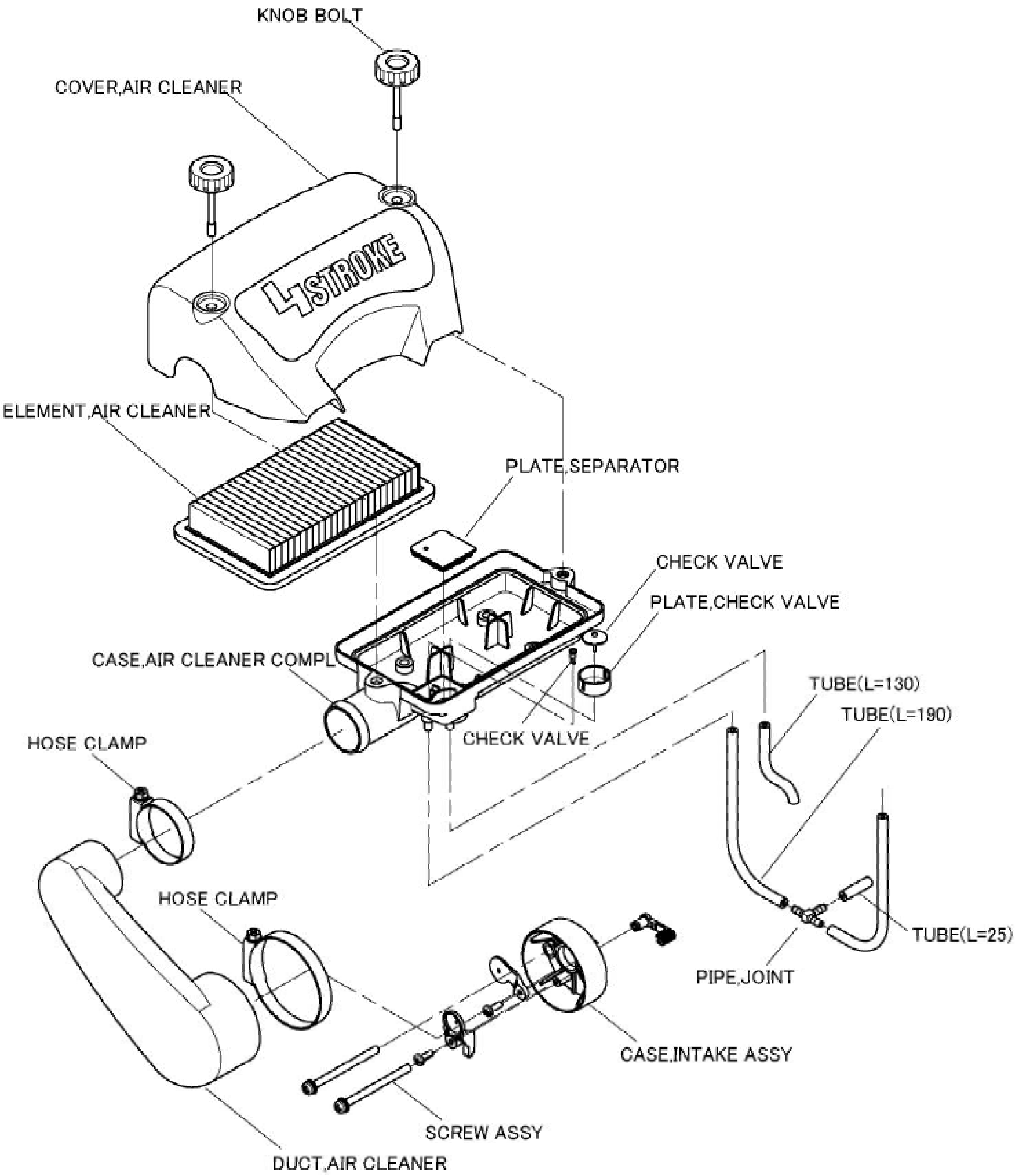

Deal Drawing of Equipment(CONTROL LEVER)

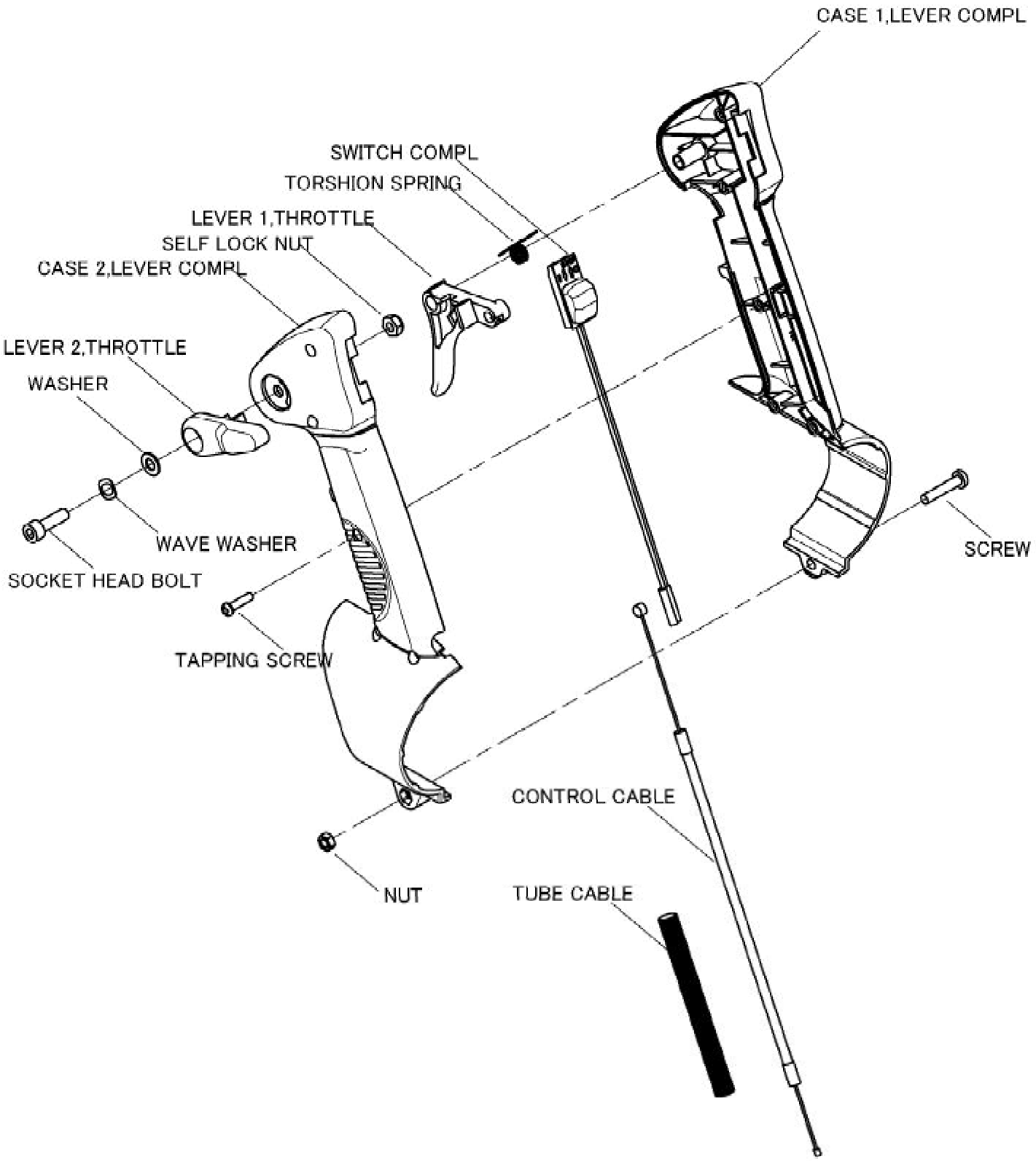

NO.	Part name	Disassembling Instructions
3	COVER,AIR CLEANER KNOB BOLT ELEMENT DUCT HOSE CLAMP	(1) Remove the COVER,AIR CLEANER by looseninig KNOB BOLTS. (2) Remove the DUCT by looseninig HODE CLAMPS. 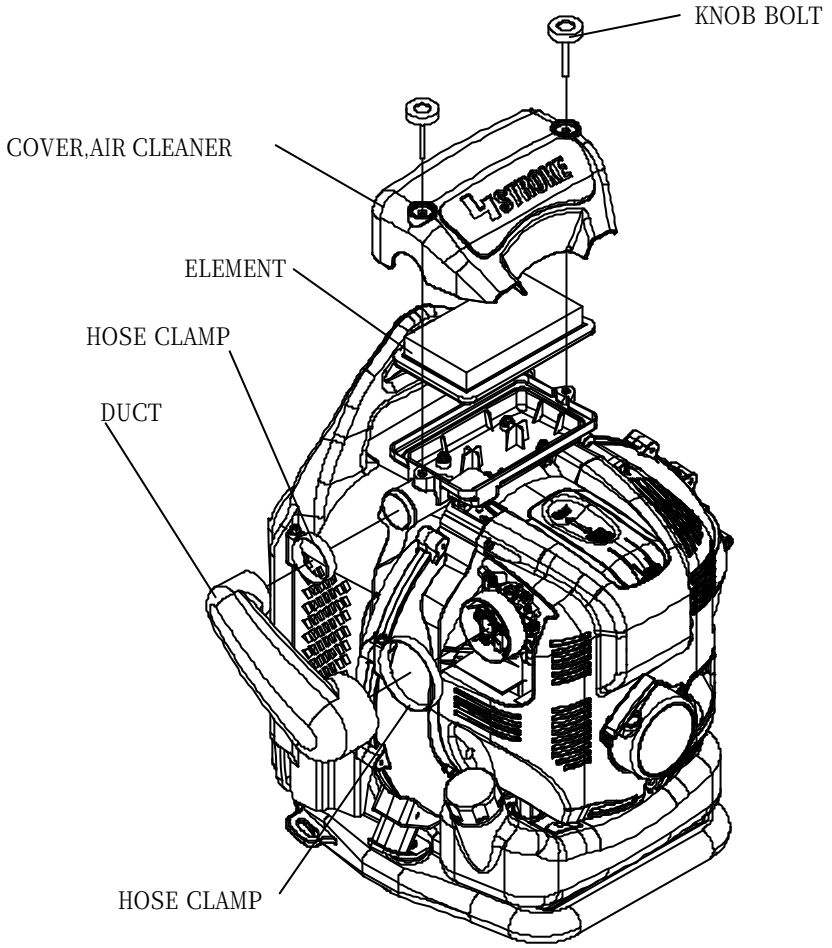

NO.	Part name	Disassembling Instructions
4	COVER,ENGINE COVER,PLUG GUARD,OIL STARTER	(1) Remove the GUARD,OIL. (2) Remove the STARTER. (3) Remove the COVER,ENGINE. **NOTICE:** Be careful not to loose the GUARD, OIL or COVER, PLUG.
5	TANK,FUEL	(1) Remove the fuel tube. **NOTICE:**The fuel will spout if the fuel tube is removed with the fuel tank filled with fuel. (2) Remove the TANK,FUEL.

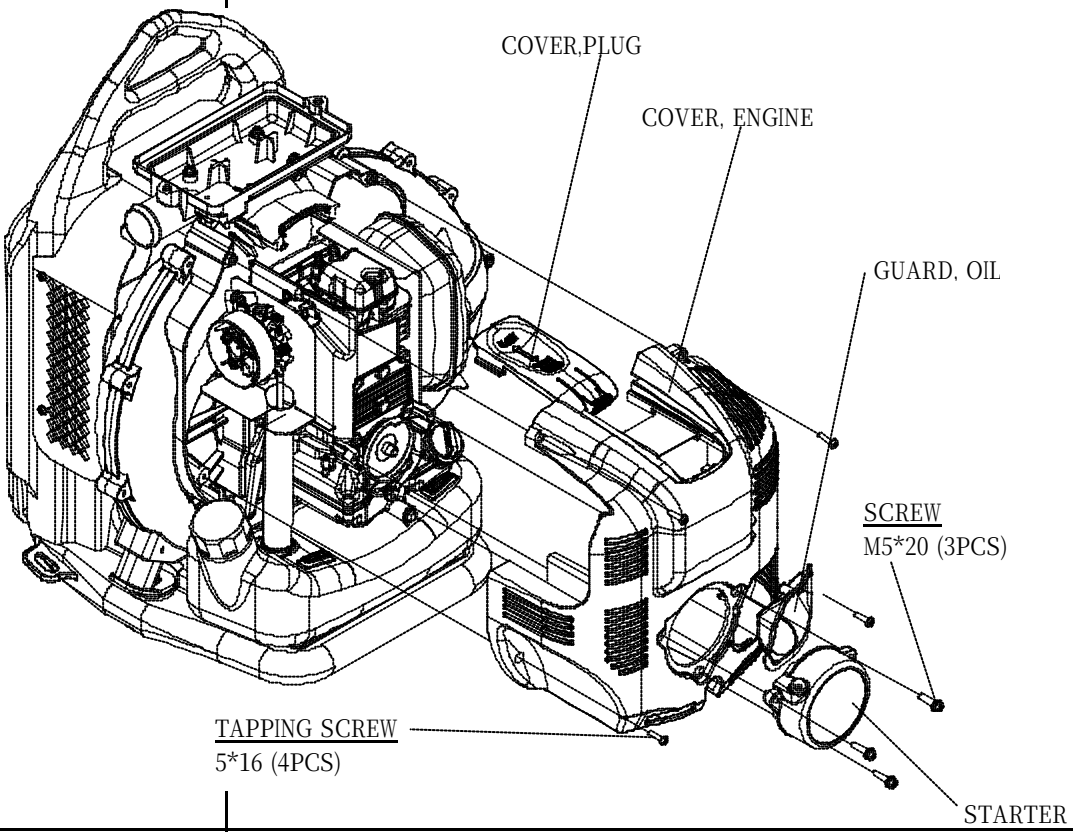

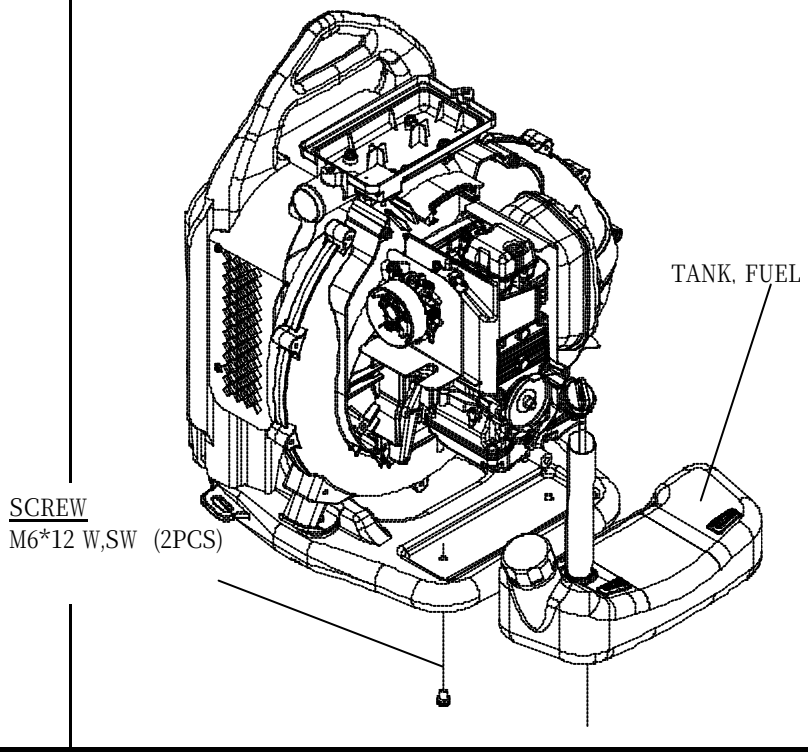

NO.	Part name	Disassembling Instructions
6	LEVER (CONTROL CABLE ,WIRING) For instructions on the lever disassembling, see pages 14 and 15.	(1) Disconnect the wiring. (2) Disconnect the CONTROL CABLE from the CARBURETOR. 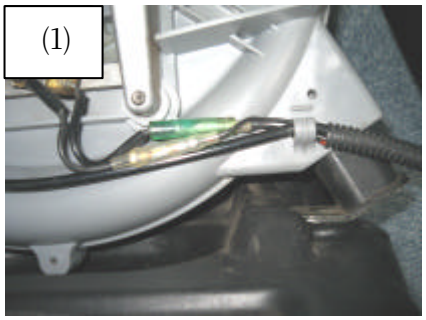 (1) 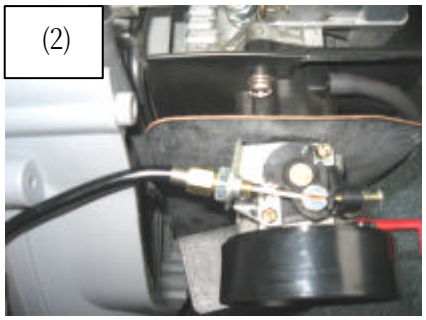 (2)
7	CASE, AIR CLEANER ～CASE,VOLUTE	(1) Remove the CASE,AIR CLEANER. (2) Disconnect the two tubes connected to the air cleaner. 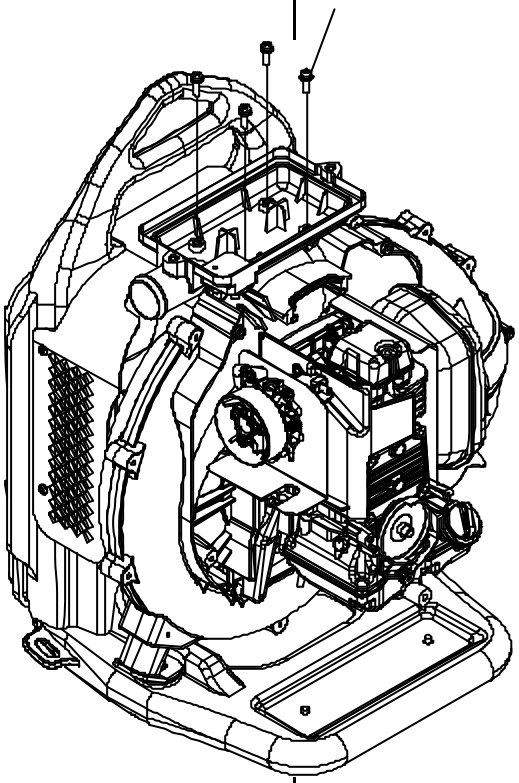 SCREW M5*16 W,SW (4PCS) 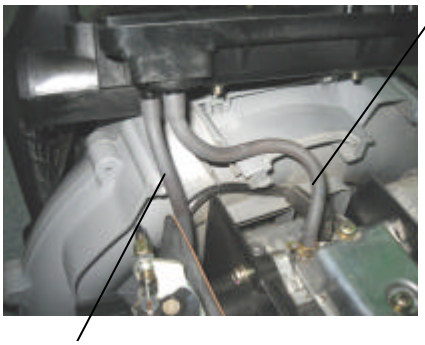 ROCKER COVER～AIR CLEANER AIR CLEANER～CYLINDER 7-1 Instructions on the CASE, AIR CLEANER disassembling. (1) Remove the PLATE,SEPARATOR. (2) Remove the PLATE,CHECK VALVE(with the CHECK VALVE). (3) Remove the CHECK VALVE (1). **NOTICE:** Be careful not to loose the parts. Handle the CHECK VALVE with care not to damage it. 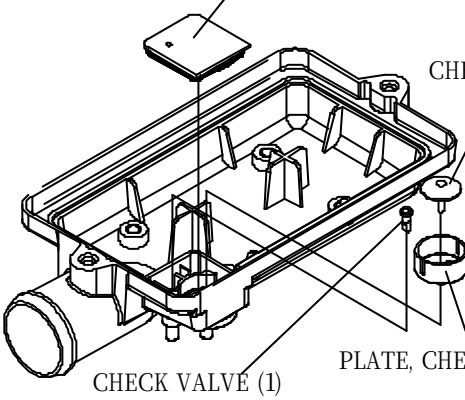 PLATE, SEPARETOR CHECK VALVE PLATE, CHECK VALVE CHECK VALVE (1)

NO.	Part name	Disassembling Instructions
8	FRAME	(1) Remove the FRAME. 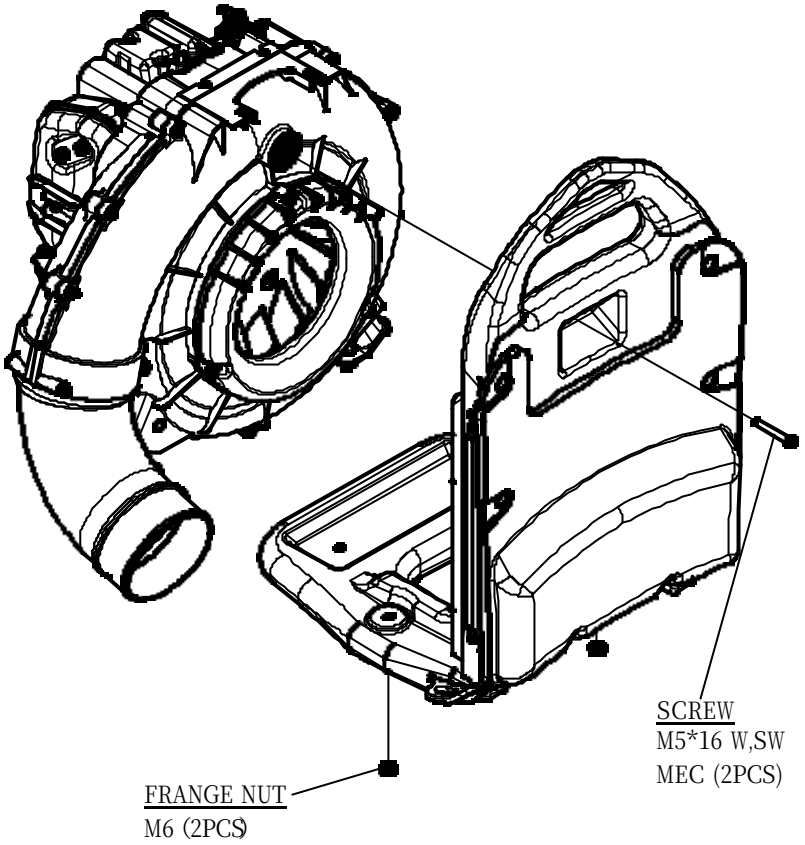
9	CASE 1,VOLUTE DAMPER 2 ELBOW O-RING	(1) Remove the CASE 1,VOLUTE. **NOTICE**: Be careful not to loose the nuts. 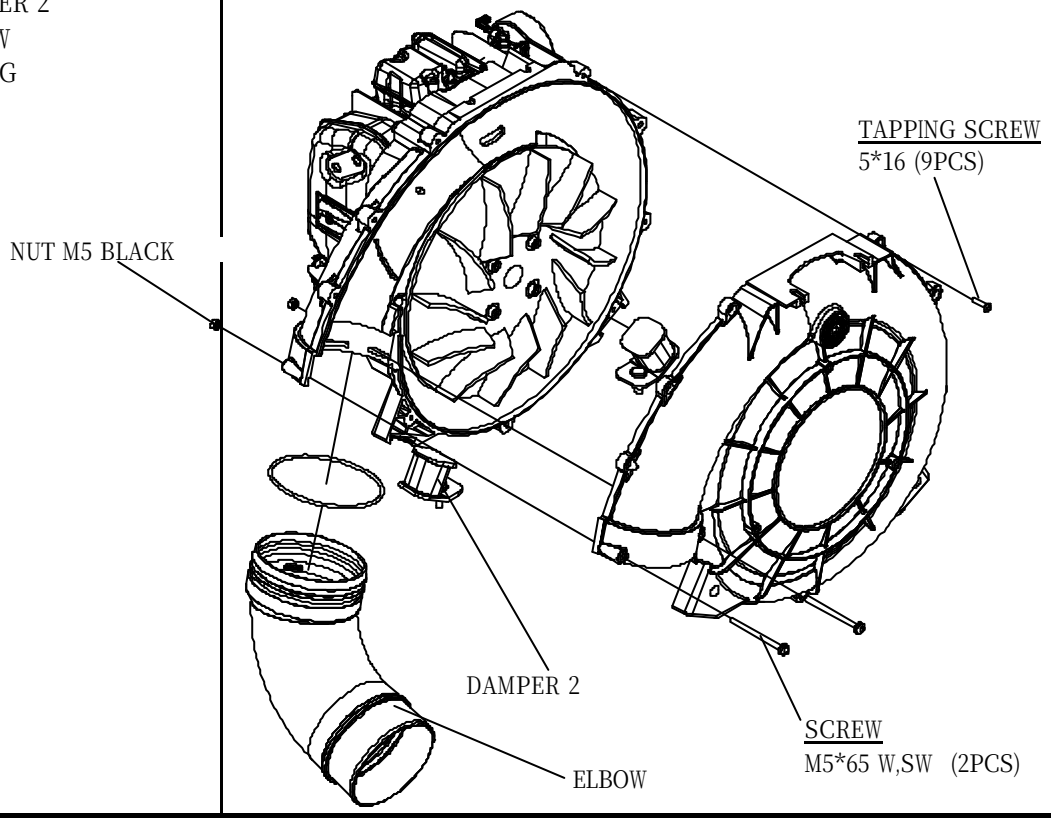

NO.	Part name	Disassembling Instructions
10	IMPELLER	(1) Remove the IMPELLER. 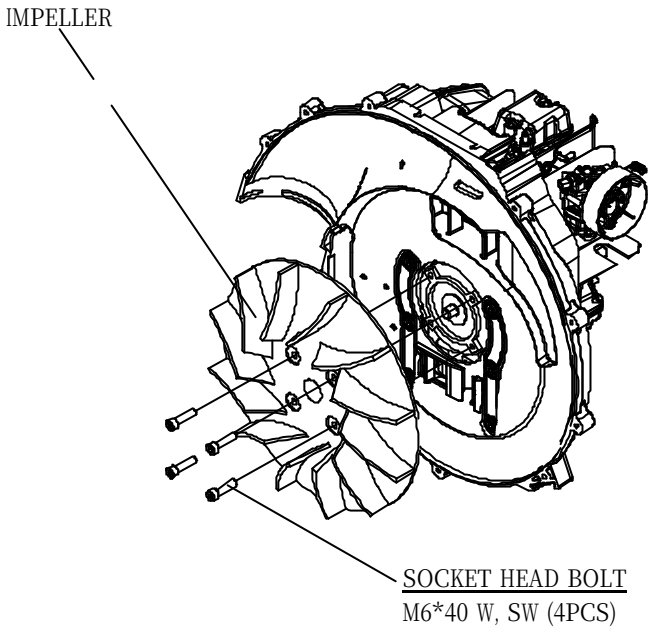
11	ENGINE ～CASE 2 ,VOLUTE	(1) Remove the ENGINE. 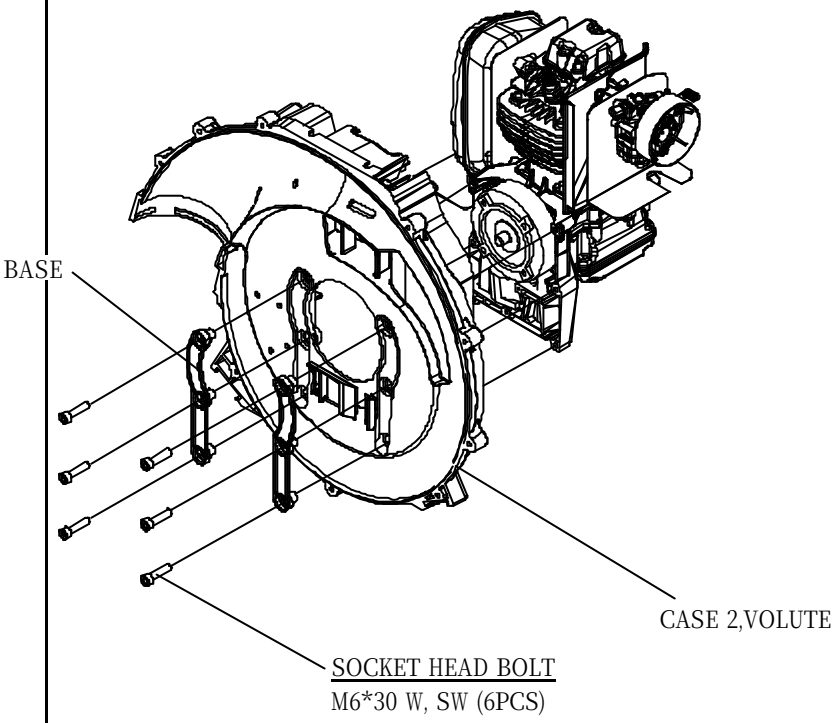

NO.	Part name	Disassembling Instructions
6-1	LEVER CASE 1,LEVER CASE 2,LEVER ASSY	(1) Remove the CASE 1,LEVER and CASE 2,LEVER ASSY.

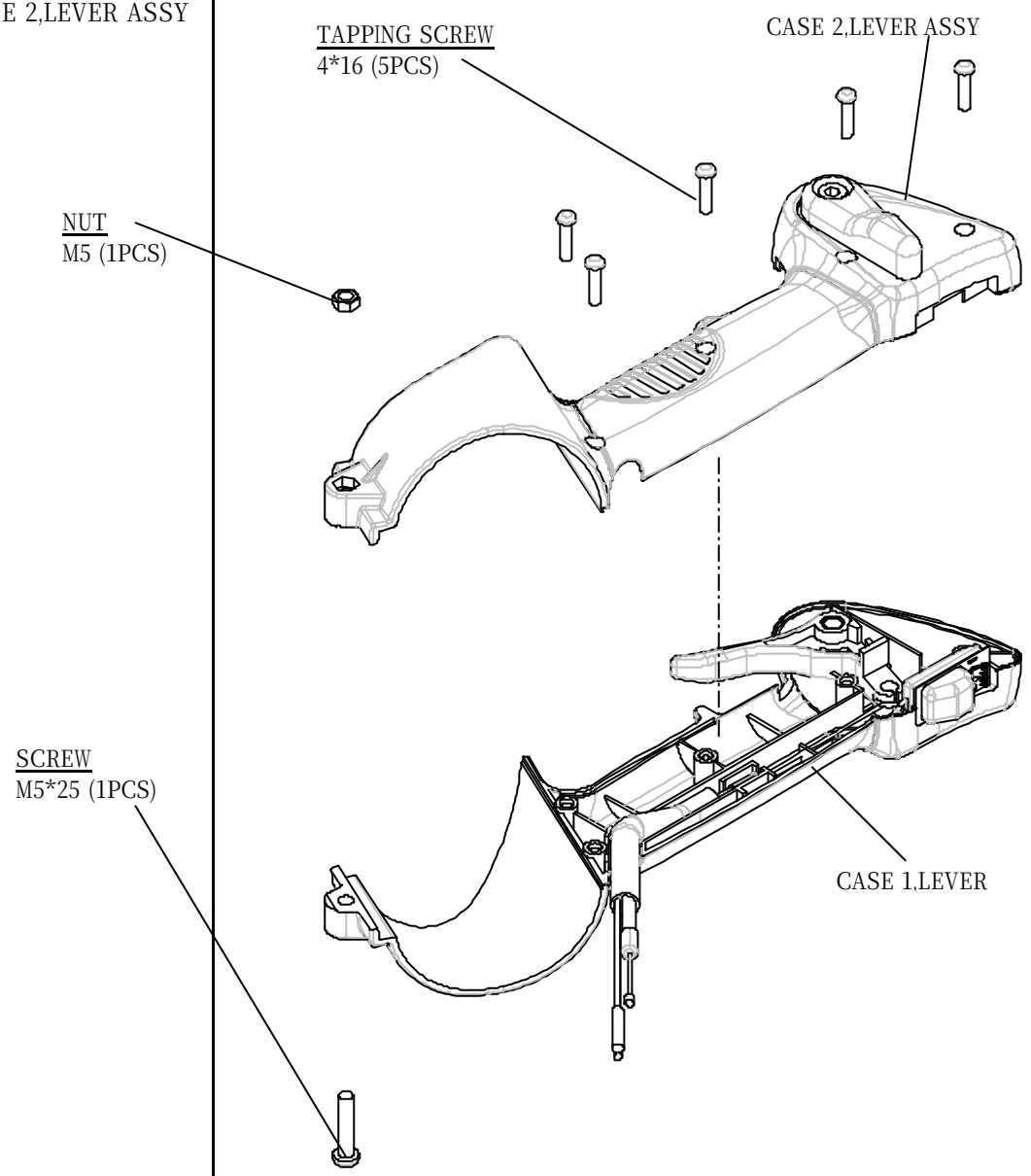

NO.	Part name	Disassembling Instructions
6-1	LEVER CASE 2,LEVER ASSY LEVER 2,THROTTLE	(2) Remove the LEVER 2,THROTTLE from the CASE 2, LEVER ASSY. 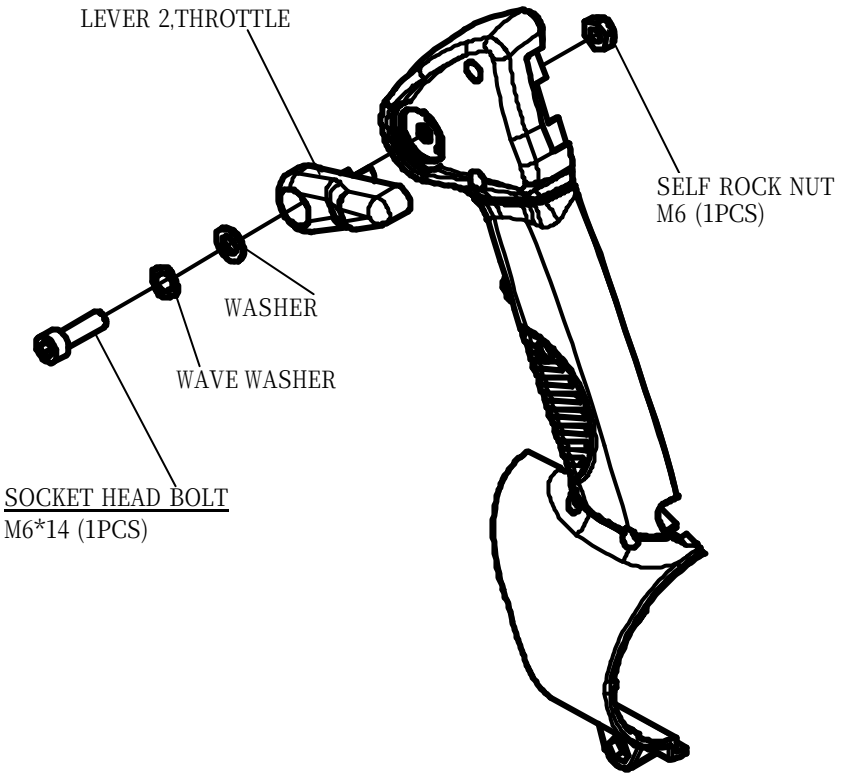

2.EQUIPMENT REASSEMBLY

Equipment reassembly procedure

1.Notice

- Clean parts completely.
- Replace screws with new ones if necessary.
- Tighten up the tightening torque specified parts according to the specified tightening torque.

2. Tightening torque of each part

For further assembling instructions on each part, see the corresponding pages.

No.	Tightening part	The kind of screw	Tightening torque (kgf·cm)	Tightening torque (N·m)	pcs	Notice
1	ENGINE ～CASE 2 VOLUTE	M6×30 W,SW SOCKET HEAD BOLT	80 +20 0	7.8 +2.0 0	6	MUFFLER GASKET position.
2	IMPELLER ～FLYWHEEL	M6×40 W,SW SOCKET HEAD BOLT	80 +20 0	7.8 +2.0 0	4	
3	CASE 1 VOLUTE ～CASE 2 VOLUTE	5×16 TAPPING SCREW	20 +10 0	2.0 +1.0 0	9	
	CASE 1、2 VOLUTE (ELBOW)	M5×65 W,SW S=15 SCREW	20 +10 -5	2.0 +1.0 -0.5	2	Check if the ELBOW can be smoothly rotated with the hand, after screwing the screws.
4	CASE 1 VOLUTE ～COVER,INRET	5×25 TAPPING SCREW	20 +10 0	2.0 +1.0 0	3	
	DAMPER1 ～CASE1,VOLUTE	M5×40 SCREW	20 +10 -5	2.0 +1.0 -0.5	1	
5	FRAME ～DAMPER1	M5×16 W,SW MEC SCREW	25 +15 0	2.5 +1.5 0	2	
	FRAME ～DAMPER2	M6 FRANGE NUT	25 +15 0	2.5 +1.5 0	2	
8	CASE, AIR CLEANER ～CASE 1,2 VOLUTE	M5×16 W,SW SCREW	25 +15 0	2.5 +1.5 0	4	
10	FRAME ～TANK,FUEL	M6×12 W,SW SCREW	25 +10 -5	2.5 +1.0 -0.5	2	Be sure to install the fuel tubes.
11	GUARD,MUFFLER ～COVER, ENGINE	4×6 TAPPING SCREW	10 +5 0	1.0 +0.5 0	4	Be sure to install the GUARD,MUFFLER.
12	COVER, ENGINE ～CASE 2 VOLUTE	5×16 TAPPING SCREW	20 +10 0	2.0 +1.0 0	4	
	STARTER ～ENGINE	M,5×20 W,SW SCREW	25 +15 0	2.5 1.5 0	3	
13	CASE 2,LEVER ～LEVER 2,THROTTLE	M6×14 SOCKET HEAD BOLT	20 +5 0	2.0 +0.5 0	1	Check if the LEVER 2, THROTTLE can be smoothly moved with the hand, after fitting it in the CASE 2,LEVER by screwing the bolt.
	CASE 1,LEVER ～CASE 2,LEVER	4×16 TAPPING SCREW	5 +3 0	0.5 +0.3 0	5	

NO.	Part name	Assembling Instructions
1	ENGINE ～CASE 2,VOLUTE ～BASE 1,2	(1) Fix the ENGINE to the CASE 2,VOLUTE with the knock positions united. (2) Be careful not to leave the high tension code and wire between the CASE 2,VOLUTE and ENGINE. (3) Install the GASKET,MUFFLER on the CASE 2,VOLUTE rib with the number (a) as shown in the photograph.
2	IMPELLER	

(3)

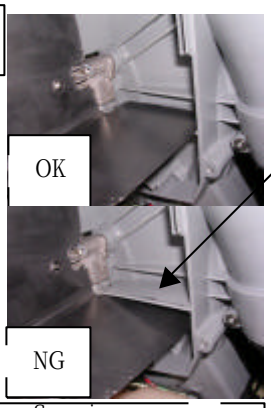

(a)

Screwing sequence
Screw the SOCKET HEAD BOLTS in numerical serial sequence (①－⑥).

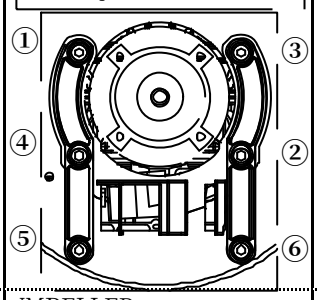

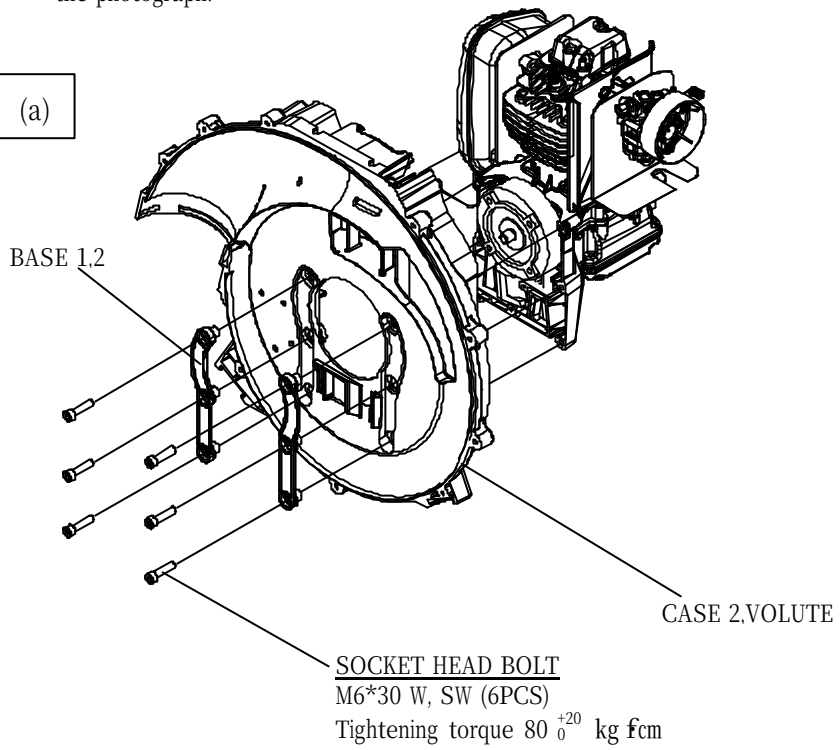

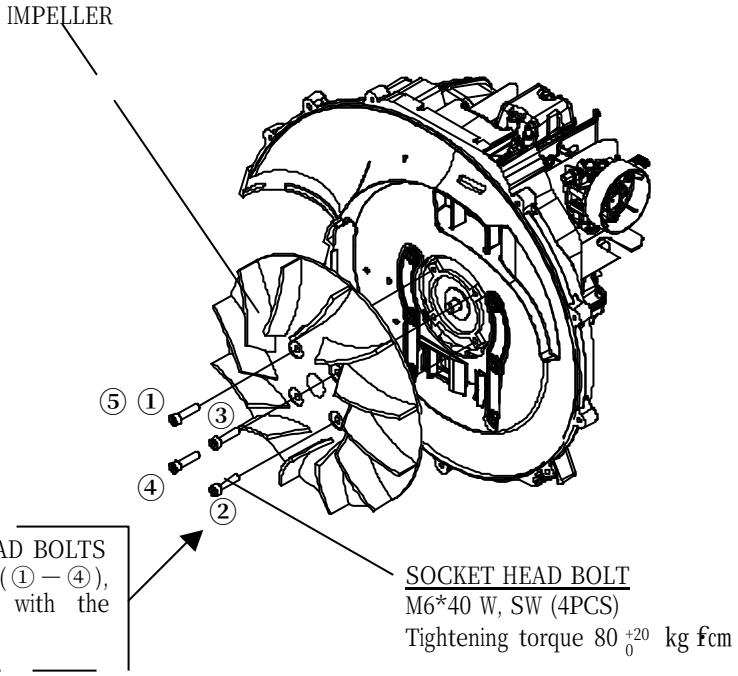

After screwing the SOCKET HEAD BOLTS in numerical serial sequence (①－④), check if they are tightened with the specified tightening torque.

NO.	Part name	Assembling Instructions
3	CASE 1,VOLUTE DAMPER 2 ELBPW O-RING	(1) Fit the DAMPER 2s in the groove of the CASE 2,VOLUTE. (2) Install the ELBOW with its outlet directed toward the CASE 1,VOLUTE. (3) Screw the TAPPING SCREWS clockwise beginning with the one at the ELBOW side. TAPPING SCREW 5*16(9PCS) Tightening torque 20^{+5}_{0} kg·cm NUT M5 BLACK O-RING Fit the O-RING in the inner top groove of the ELBOW. (Apply silicon or grease over the ring before fitting it.) 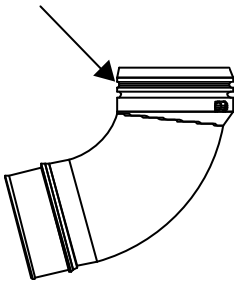 CASE 1,VOLUTE After screwing the screws, check if the ELBOW can be smoothly rotated with the hand. DAMPER 2 SCREW M5*65 W,SW (2PCS) Tightening torque 20^{+10}_{-5} kg·cm) ELBOW
4	COVER, INLET DAMPER 1 Be careful about the DAMPER 1 direction.  Place the DAMPER 1 at the protruding portion on the vertical rib of the CASE 1,VOLUTE. 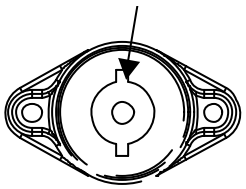	WASHER (φ25) DAMPER 1 SCREW M5*40 (1PCS) Tightening torque 20^{+10}_{-5} kg·cm (Tighten the SCREW temporarily here, and then tighten it with the tightening torque above after the frame assembling.) TAPPINNG SCREW 5*25 (3PCS) Tightening torque 20^{+5}_{0} kg·cm COVER, INLET

NO.	Part name	Assembling Instructions
5	FRAME CUSHION	Tighten the SCREW with the tightening torque as shown in the preceding page after the FRAME assembling. FRAME RIVET ROCK 6PCS) FRANGE NUT M6 2 ヶ) Tightening torque 25 $^{+15}_{0}$ kg fcm CUSHION SCREW M5*16 W,SW MEC(2PCS) Tightening torque 25 $^{+15}_{0}$ kg fcm
6	FRAME ～NET	(1) Install the NET on the FRAME by screwing the SCREW RIVETS. NET SCREW RIVETS Upside NET

NO.	Part name	Assembling Instructions
7	CASE, AIR CLEANER ～TUBE	(1) Install the tubes correctly as shown in the photographs below. Apply silicon or oil over the inserting part of the tubes before installing them, if necessary.  ROCKER COVER～AIR CLEANER AIR CLEANER～CYLINDER 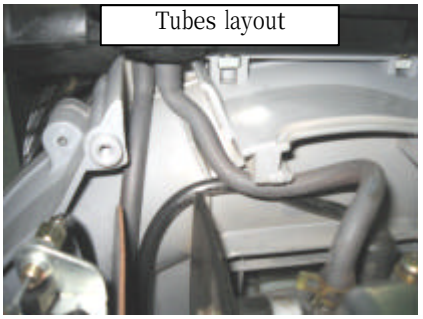 Tubes layout
8	CASE, AIR CLEANER ～CASE,VOLUTE	SCREW M5*16 W,SW (4PCS) Tightening torque 25^{+15}_{0} kg f·cm 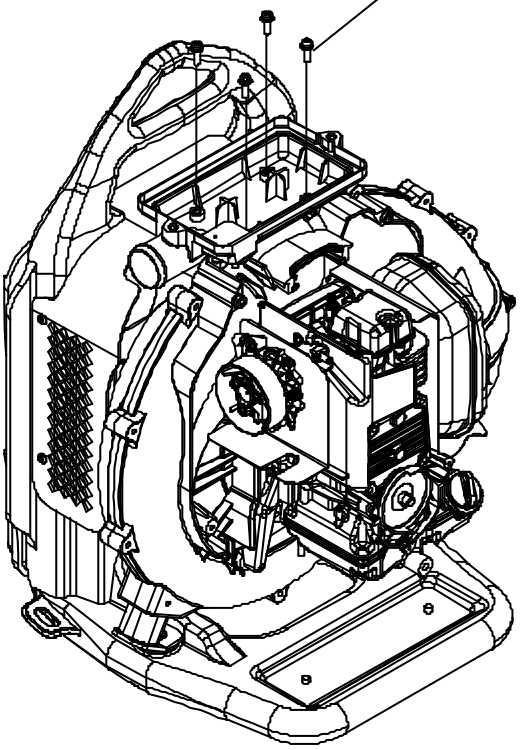

NO.	Part name	Assembling Instructions
9	LEVER (CONTROL CABLE &WIRING)	(1) Insert the inner cable of the CONTROL CABLE into the CARBURETOR 'S adjusting bolt and fit it in the SWIVEL groove. (2) Fit the outer cable of the CONTROL CABLE and high-tension code in the groove of the CASE 2,VOLUTE. (The CONTROL CABLE should be under the high-tension code.) (3) Connect the WIRES from the LEVER and the ones of the COIL, and hold the CONTROL CABLE and connected wire using the clamp of the CASE 2,VOLUTE. (4) Fix the cable to the ELBOW with the tie-wrap. 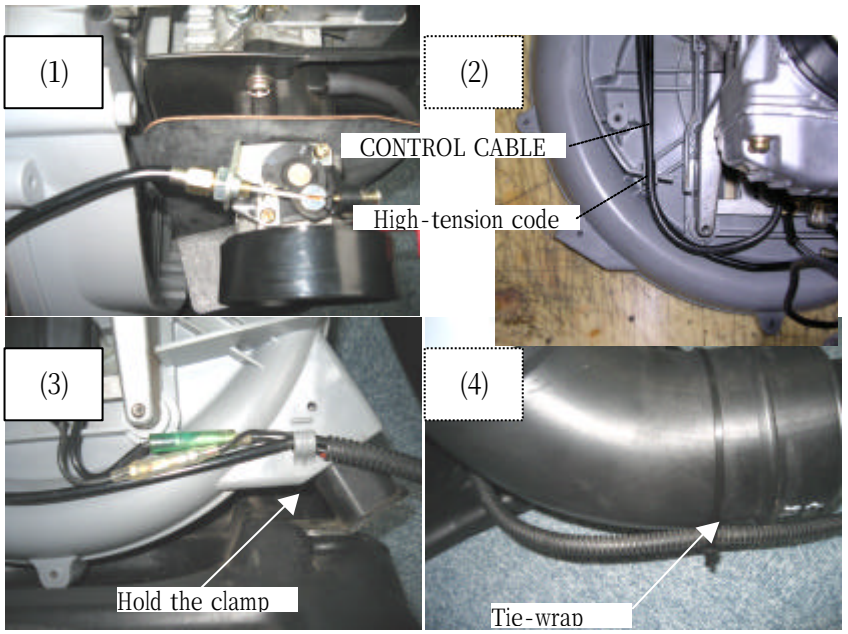
10	TANK,FUEL	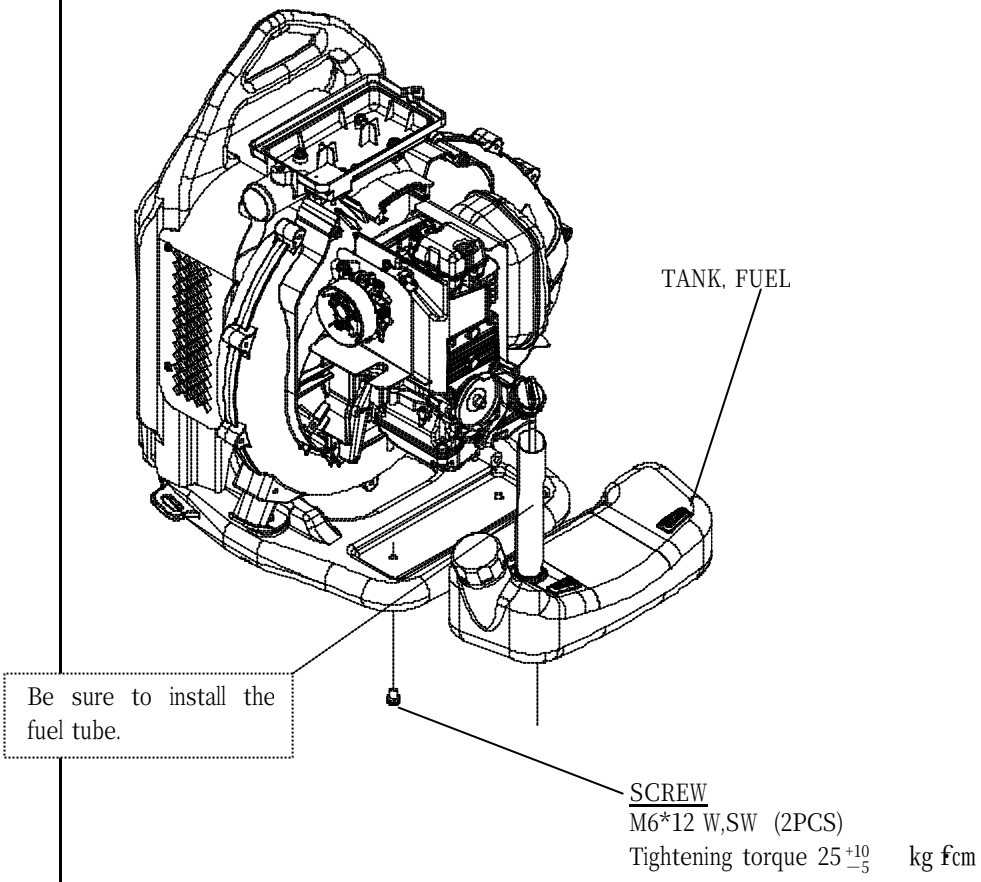

NO.	Part name	Assembling Instructions
10	GUARD, MUFFLER ～COVER, ENGINE	(1) Fold the GUARD,MUFFLER as shown in the photographs. (2) Put the GUARD,MUFFLER in the COVER, ENGINE along its rail, and fit the COVER, ENGINE at its protruding portion into the groove of the GUARD, MUFFLER. (3) Fix the GUARD, MUFFLER to the COVER, ENGINE with the TAPPING SCREW.  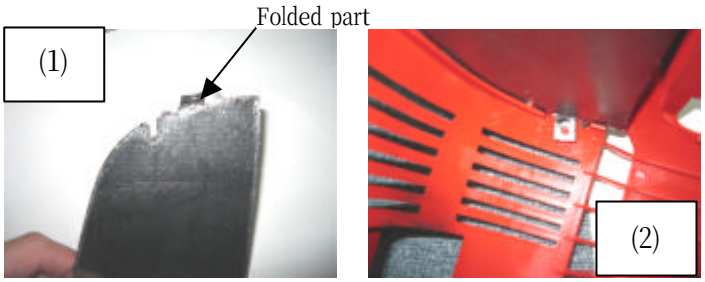 **NOTICE:** Be sure to install the GUARD, MUFFLER. 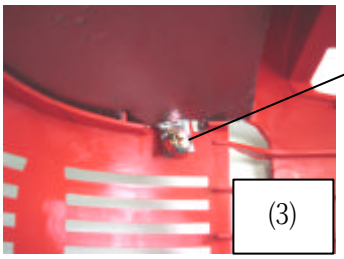 TAPPING SCREW 4*6 Tightening torque 10^{+5}_{0} kgf·cm
11	COVER,ENGINE GUARD,OIL STARTER COVER, PLUG	(1) Fix the COVER,PLUG in advance to the COVER,ENGINE. (2) The GASKET, CARBURETOR should be positioned on the part with number (b) of the COVER, ENGINE. 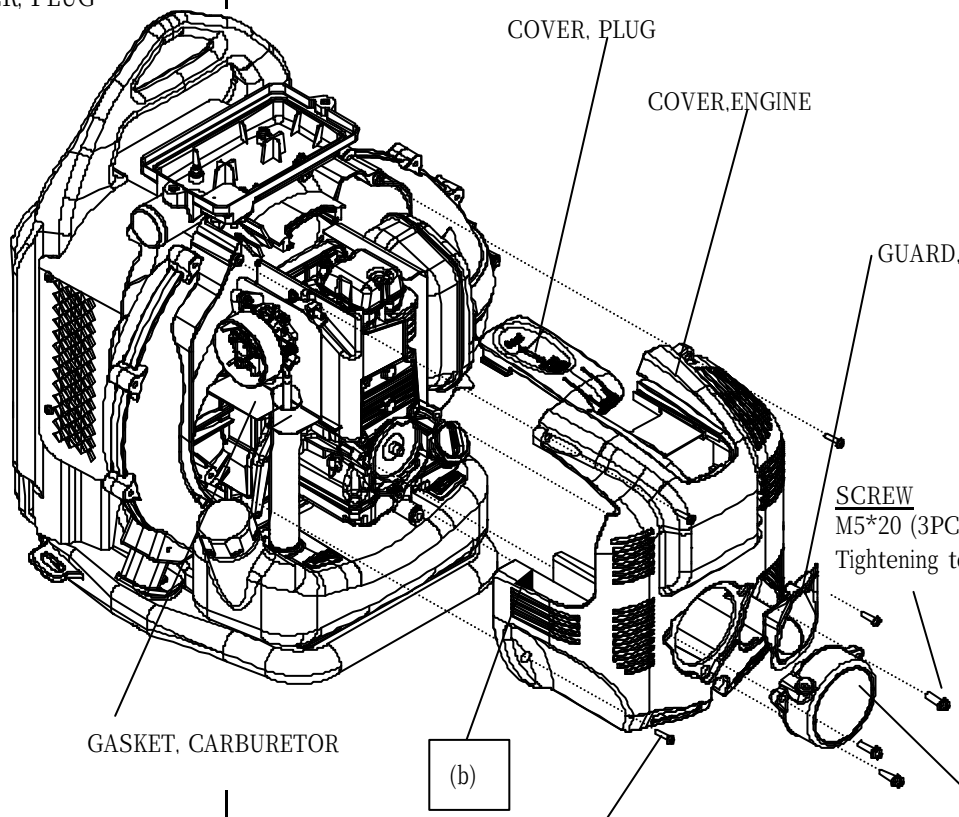

NO.	Part name	Assembling Instructions
12	ELEMENT COVER,AIR CLEANER KNOB BOLT DUCT HOSE CLAMP	(1) The KNOB BOLTS may be screwed with the hand. (2) The tightening torque of the HOSE CLAMP bolt should be 15kgf·cm. (3) Be careful that the DUCT fitted in is not covered with the COVER,AIR CLEANER.

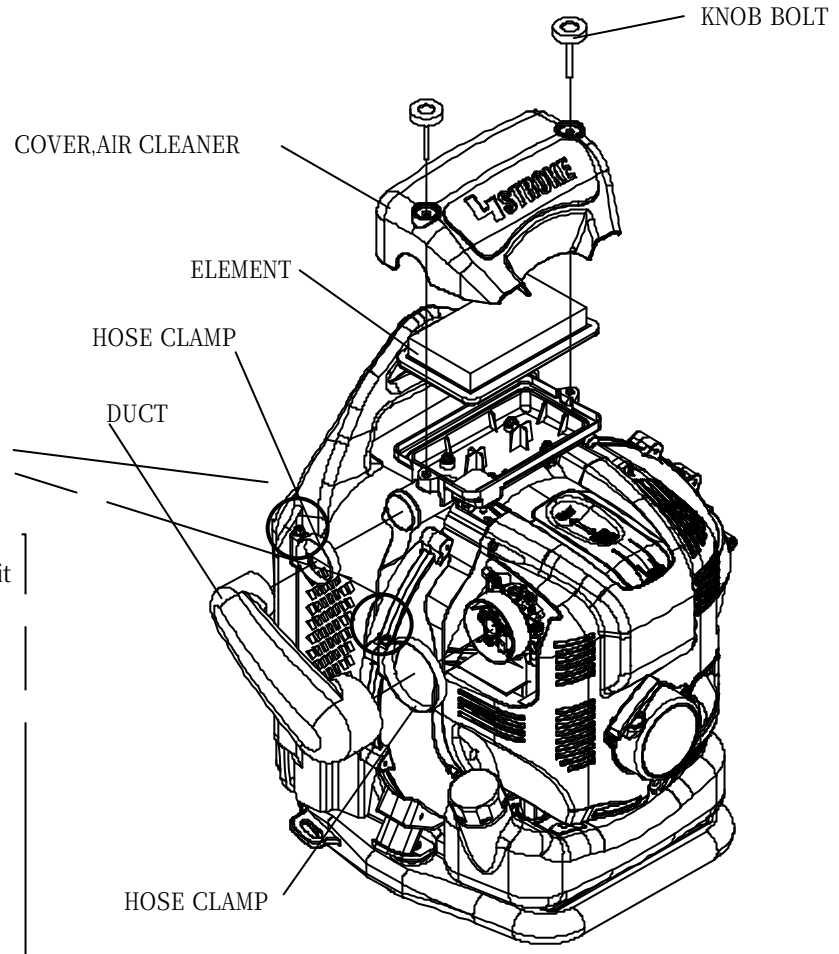

Fit in the hose clamp with the bolt directed upward.

(2) After fitting in the DUCT, pull it in the direction of the arrow shown below until it stops so that the DUCT fitted in is not be covered with the COVER,AIR CLEANER.

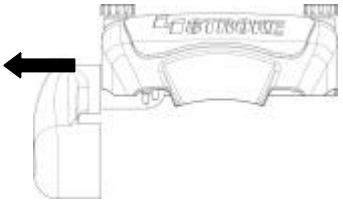

NO.	Part name	Assembling Instructions
13-1	LEVER CASE 2,LEVER LEVER 2,THROTTLE	(1) Fit the throttle lever in the CASE 2,LEVER using the SOCKET HEAD BOLT, WAVE WASHER, WASHER, and SELF LOCK NUT. 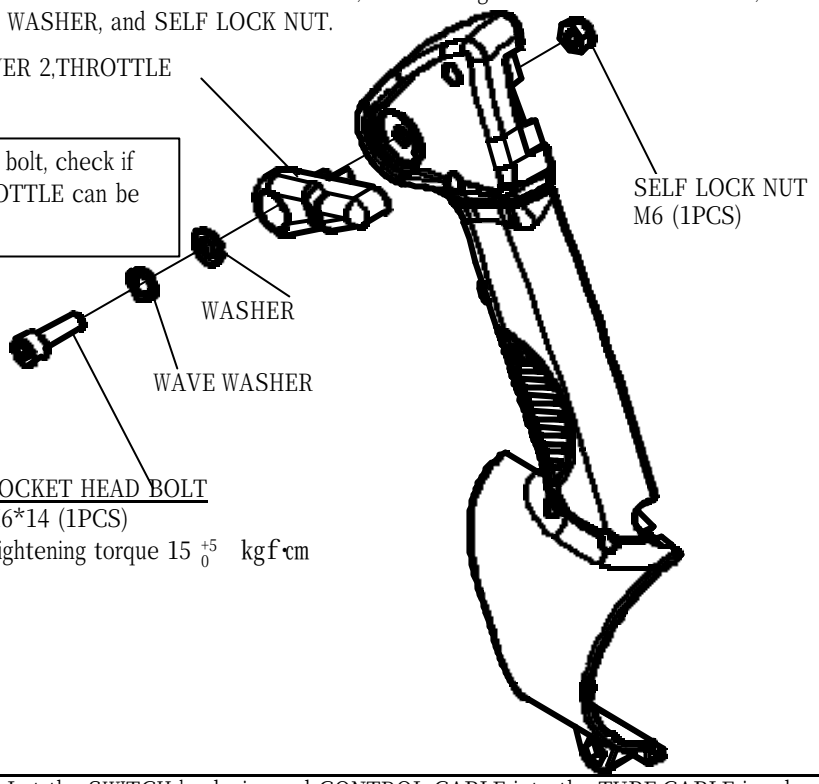
13-2	CASE 1,LEVER LEVER 1,THROTTLE CONTROL CABLE SWITCH TORSION SPRING	(1) Let the SWITCH lead wire and CONTROL CABLE into the TUBE,CABLE in advance. (2) Fit the SWITCH lead wire in the groove of the CASE 1,LEVER. (3) Fit the end fitting of the control inner cable in the hole (c) of the LEVER 1,THROTTLE. Fit the TORSION SPRING over the cylindrical hollow column (e) and fit the LEVER 1,THROTTLE hole (d) over the cylindrical column (e). 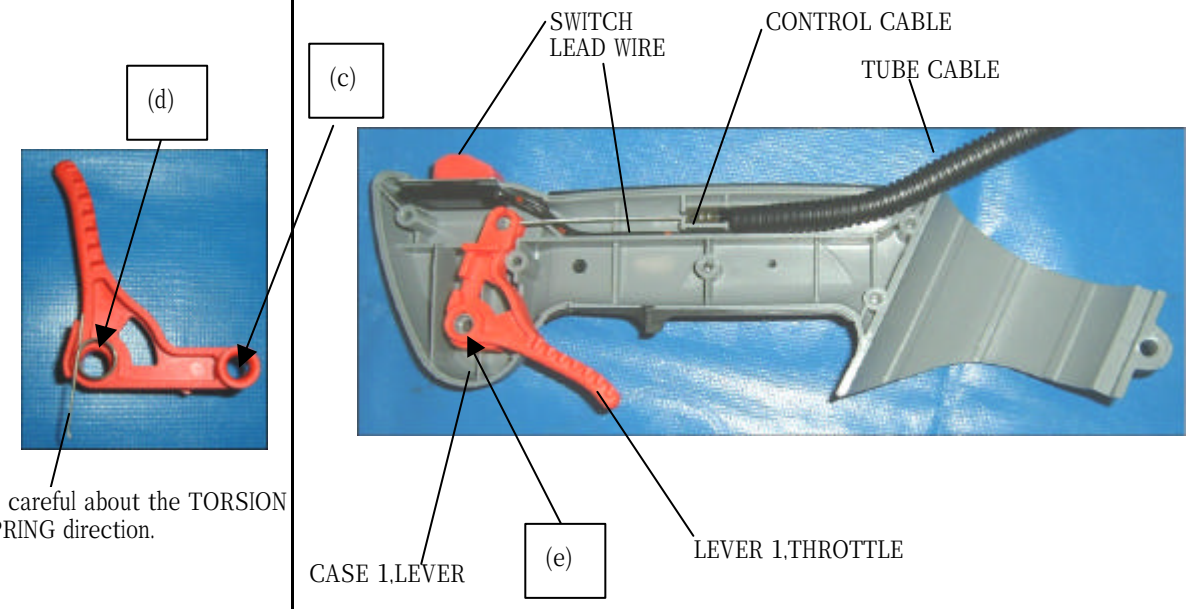

NO.	Part name	Assembling Instructions
13-3	CASE 1,LEVER CASE 2,LEVER	(1) Join the CASE 2,LEVER (fitted in according to no.13-1) and CASE 1,LEVER (fitted in according to no.13-2) together.

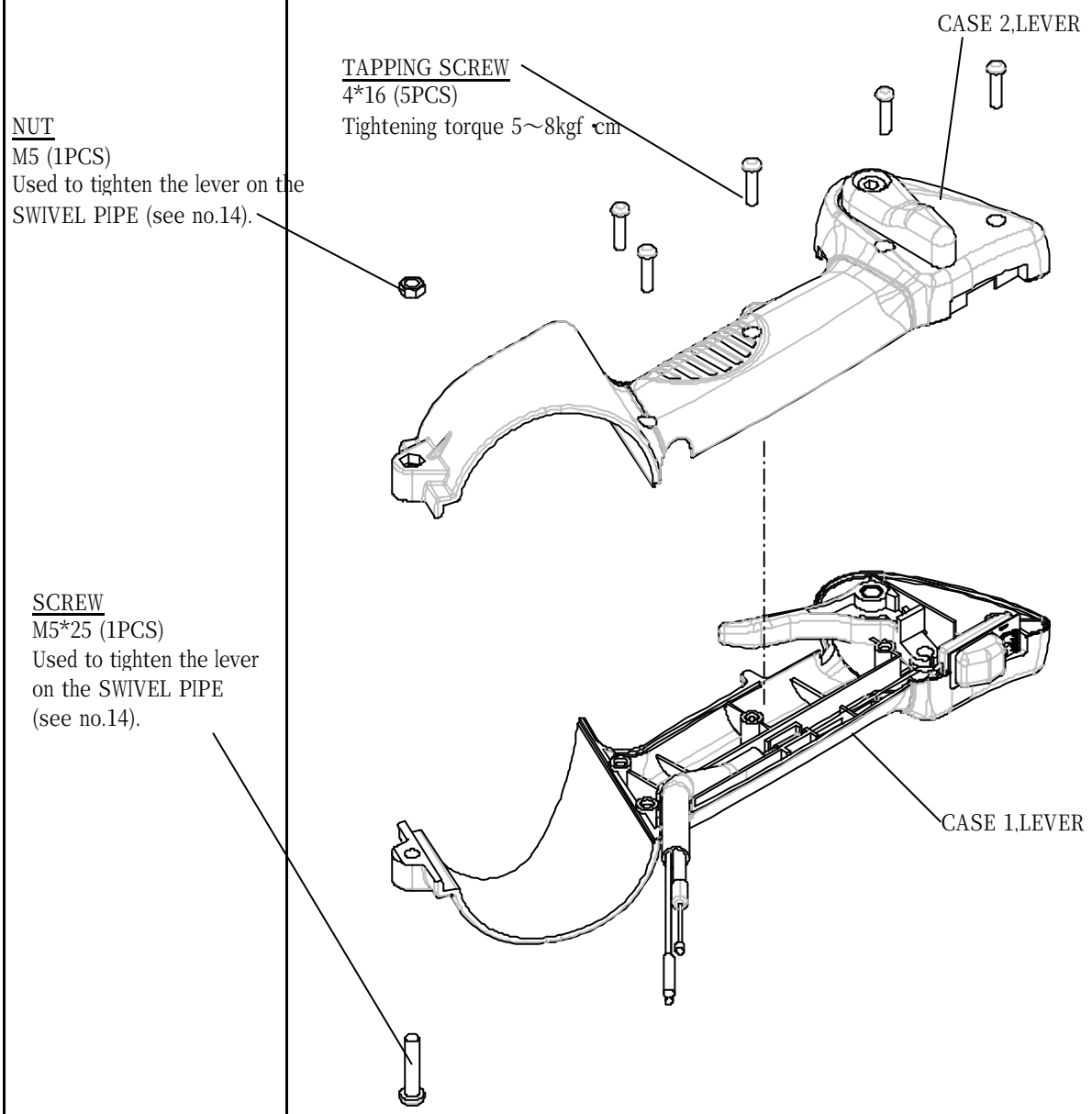

NO.	Part name	Assembling Instructions
14	PIPE	(1) Fit the straight pipe with the SWIVEL PIPE in the FLEXIBLE PIPE and tighten the HOSE CLAMP φ76. (2) Install the LEVER onto the straight pipe with the SWIVEL PIPE and tighten the clamp screw and nut. (3) Fit the FLEXIBLE PIPE in the ELBOW on the blower and tighten the HOSE CLAMP φ100. (4) Insert the BLOWER PIPE into the SWIVEL PIPE. and turn the BLOWER PIPE clockwise to tighten it. Insert the BLOWER NOZZLE into the BLOWER PIPE. and turn the BLOWER NOZZLE clockwise to tighten it. 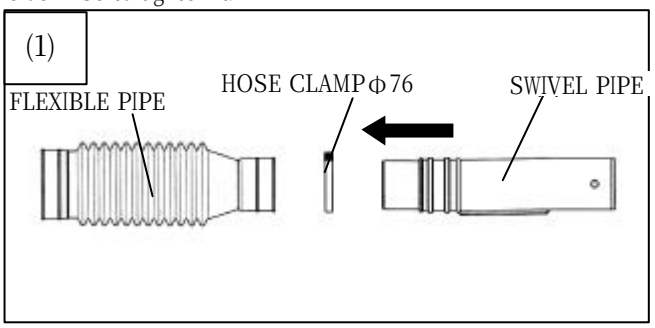 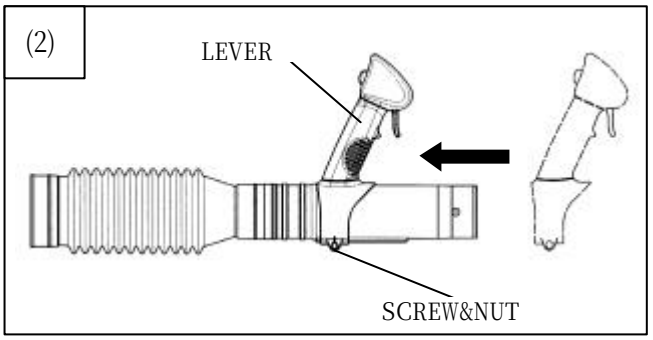 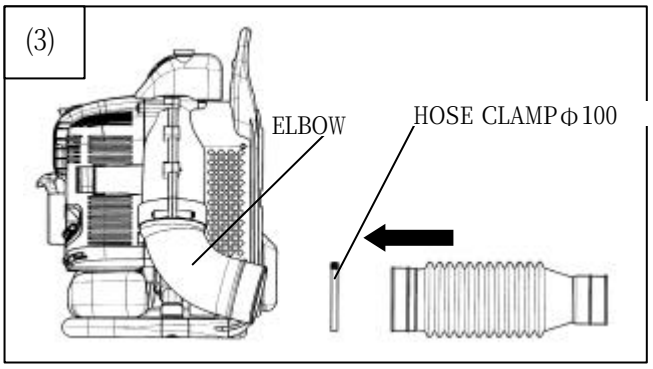 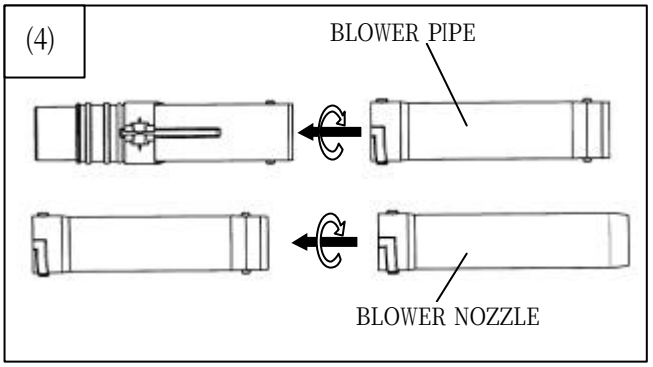

NO.	Part name	Assembling Instructions
15	BAND	(1) Loop the end of the BAND through the lower part of the HANGER as shown in the figure at right. The side of the BAND that has the folded tip should be facing outwards. Then, bring the end of the BAND back over the HANGER and thread the remaining length of the BAND through the BUCKLE. Tighten the BUCKLE by pushing it towards the HANGER in the direction of the arrow shown in the drawing while pulling on the BAND in the opposite direction. (2) After attaching the BAND, tighten the BUCKLE to the HANGER. Tug strongly at the BAND to make sure that the BAND is secure and will not come undone. (3) Attach the HOOK at the bottom of the BAND to the ring on the frame. Verify that the BAND is not twisted. (1) (2) 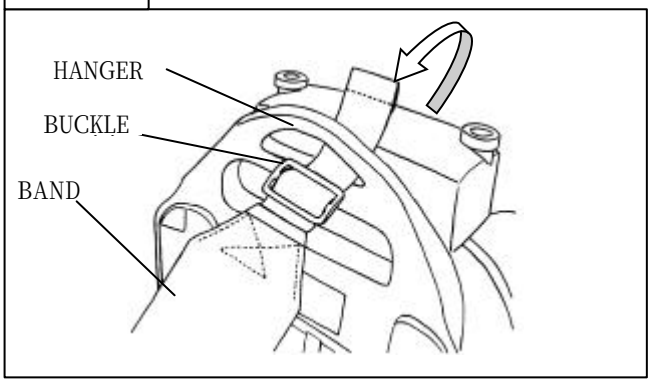 (3) 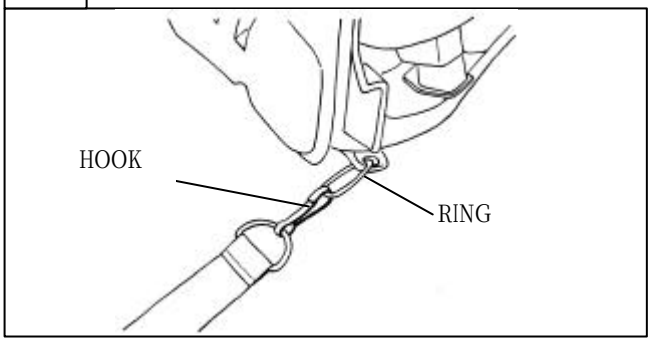

3.ENGINE DISASSEMBLY

For further disassembling instructions on each part, see the corresponding pages.

step	Part of remove	Procedure	Fastener	PCS	Notice	Special tool
1	PULLEY P29	1)Remove the PULLEY.	M10 (width across flat 15)	1		
2	CASE,INTAKE P29	1)Remove the CASE,INTAKE.	M5X65mm	2	Fasten with the CARBURETOR	
3	INSULATOR P29	1)Remove the INSULATOR.	M5X25mm	2		
			M5X12mm	1		
		2)Remove the TUBE from the CYLINDER side.			Use a small flat-head screwdriver for easy removal.	small flat-head screwdriver
4	MUFFLER P30	1)Remove the MUFFLER.	M6X70mm	3		
5	PLUG,SPARK P30	1)Remove the PLUG SPARK.				16mm plug wrench
6	ROCKER COVER P30	1)Remove the ROCKER COVER.	M5X30mm	2		
7	COVER,CAMGEAR P31	1)Remove the COVER,CAMGEAR.	M5X16mm	4		
	CAMGEAR P31	1)Remove the SHAFT,CAMLIFTER.			Position the cam peakportion down.	
		2)Remove the CAMLIFTER.				
		3)Remove the SHAFT,CAMGEAR.				
		4)Remove the CAMGEAR.				
		5)Remove the PUSH ROD.				
8	CYLINDER HEAD P32	1)Remove the CYLINDER HEAD.	M6X35mm	5		
8-1	ROCKER ARM P32	1)Remove the ROCKER SHAFT.			Remove the ROCKER SHAFT by hitting with a hammer a metal bar held by the hand on the ROCKER SHAFT at the intake side.	
		2)Remove the ROCKER ARM.				
	VALVE P32	1)Remove the RETAINER,SPRING.			Support the VALVE from the inner side of the CYLINDER HEAD,push RETAINER,SPRING and slide it.	
		2)Remove the VALVE.				
		3)Remove the SPRING,VALVE.				
9	RETAINER,PLATE P33	1)Remove the RETAINER,PLATE.	M4X10mm	1	Be careful not to loose the LEAD VALVE.	
	CASE,OIL P33	1)Remove the CASE,OIL.	M5X25mm	5	Tap the recoil side of the OIL CASE using a plastic or wooden hammer.	Plastic or wooden hammer
10	FLYWHEEL COIL P34	1)Remove the COIL.	M4X20mm	2		
		2)Remove the FLYWHEEL.	M10	1	Assemble the FLYWHEEL puller as shown in the figure, and remove the FLYWHEEL with the puller by turning it clockwise.	FLYWHEEL puller
11	CRANKCASE P35	1)Remove the CRANKCASE.	M6X30mm	6	Ram a flathead screwdriver into the four grooves in turn to remove the CRANKCASE by prying it off with the screwdriver.	Flat-head screwdriver
	CRANKSHAFT P36	1)Remove the CRANKSHAFT.			Do not damage the OIL SEAL.	
12	PISTON P36	1)Remove the CLIP.			Privent dust from getting in the BEARING at the ROD,CONNECTING small end.	
		2)Remove the PISTON.				
		3)Remove the RING,PISTON.			Widening the open end of the ring might break it.	

	Part name	Disassembling Instructions	
1	PULLEY	1)Remove the PULLEY. PULLEY(M10 width across flats 15)	
2	CARBURETOR CASE,INTAKE	1)Remove the GASKET,CARBURETOR and CARBURETOR and CASE,INTAKE.(Fasten with the CARBURETOR) SCREW M5 × 65W,SW(1PCS)	
3	INSULATOR PIPE,JOINT(T) TUBE(3PCS)	1)Remove the INSULATOR. 2)Remove the tube from the CYLINDER. **NOTICE** :Detach the attached gasket thoroughly. SCREW M5 × 25W,SW(2PCS) SCREW M5 × 14W,SW(1PCS)	

	Part name	Disassembling Instructions	
4	MUFFLER	1)Remove the MUFFLER and GASKET,MUFFLER. **NOTICE** :Be careful not to loose the washers. SOCKET HEAD BOLT M6 × 70(3PCS)	
5	PLUG,SPARK	1)Remove the PLUG,SPARK. PLUG,SPARK (M10)	
6	ROCKER COVER	1)Remove the ROCKER COVER and GASKET,ROCKER COVER. SCREW M5 × 30 W,SW(2PCS)	

	Part name	Disassembling Instructions	
7	PUSH ROD COVER,CAMGEAR CAM LIFTER CAMGEAR	1)Remove the COVER,CAMGEAR. 2)Remove the PUSH ROD. 3)Remove the CAM LIFTER. 4)Remove the CAMGEAR.	

1)

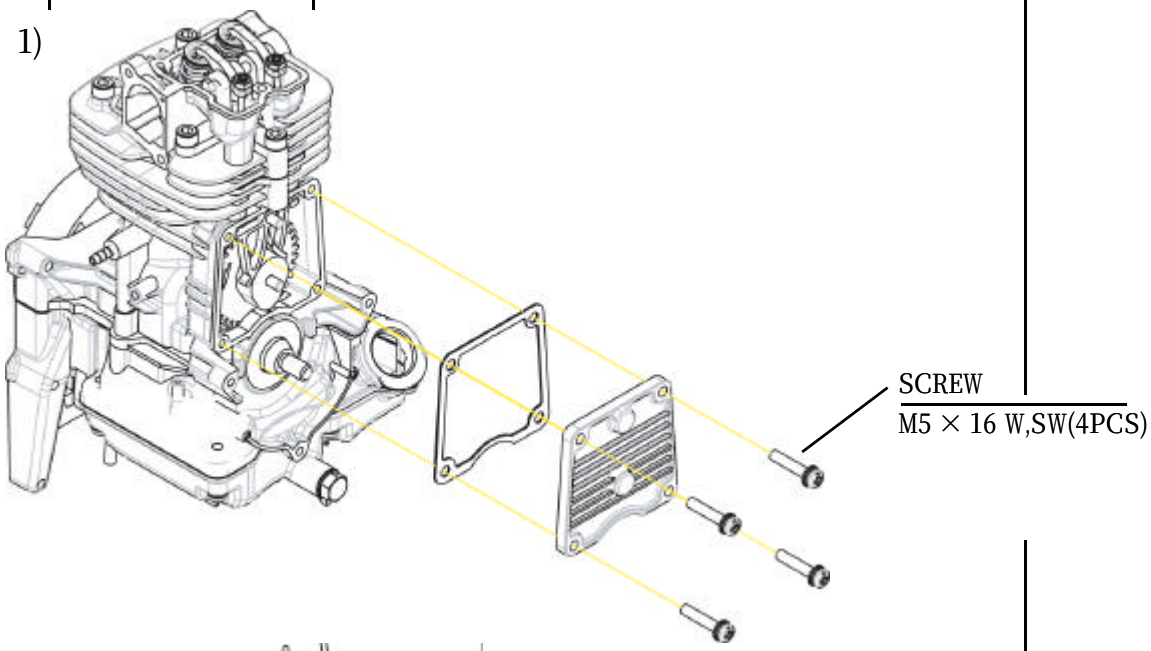

2)

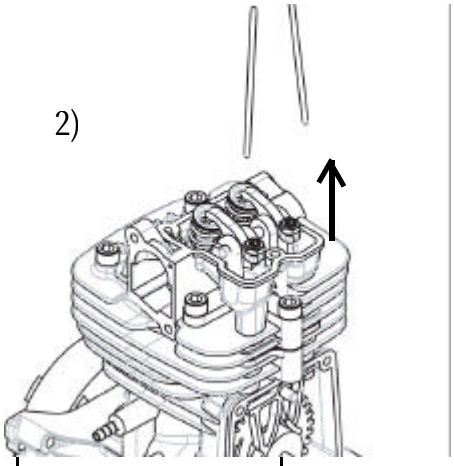

3)

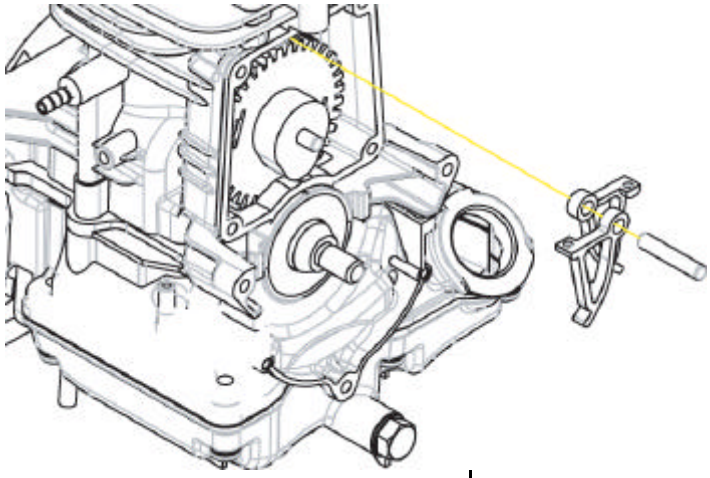

4)

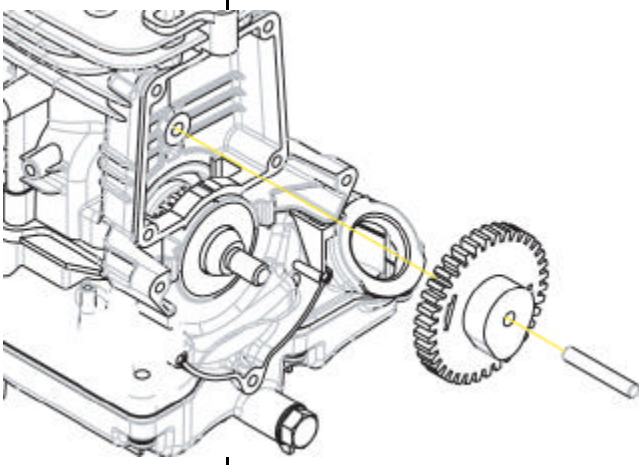

	Part name	Disassembling Instructions	
8	CYLINDER HEAD	1)Remove the CYLINDER HEAD. SOCKET HEAD BOLT M6 × 35 (5PCS) 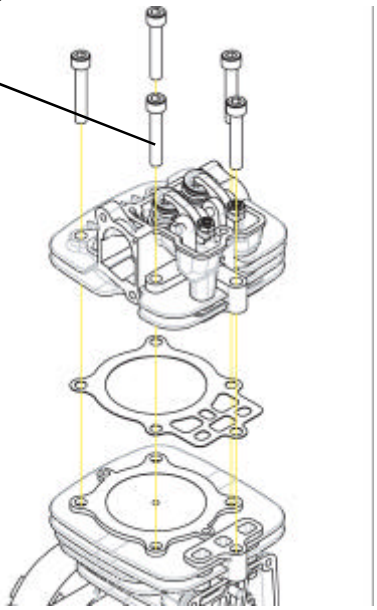	
8-1	ROCKER ARM VALVE	1)Remove the ROCKER ARM and ROCKER SHAFT. 2)Remove the VALVE and SPRING,VALVE and RETAINER,SPRING. 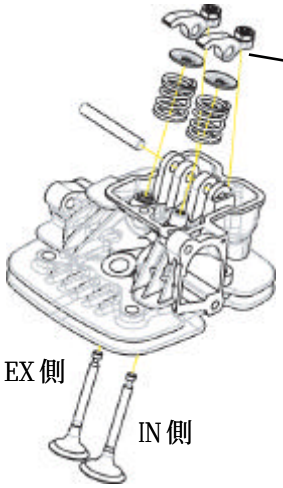 Remove the ROCKER SHAFT by hitting with a hammer a metal bar held by the hand on the ROCKER SHAFT at the intake side. EX 側 IN 側 Slide the RETAINER,SPRINGS by pressing the SPRINGS with the RETAINER,SPRINGS, and remove the VALVES. 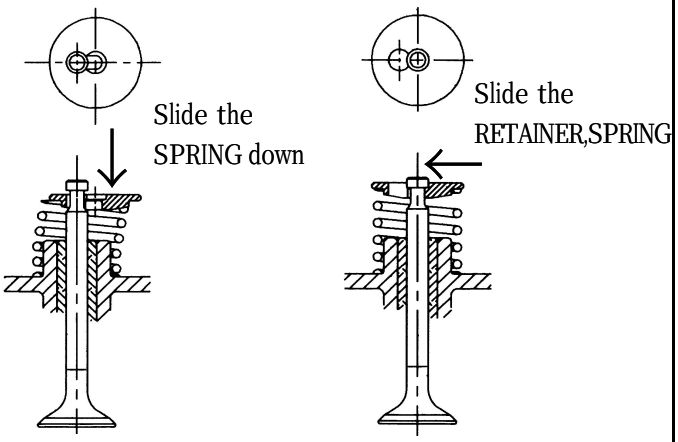 Slide the SPRING down Slide the RETAINER,SPRING	

	Part name	Disassembling Instructions	
9	RETAINER,PLATE CASE,OIL OTHERS	1)Remove the LEAD,VALVE and RETAINER,PLATE. 2)Remove the CASE,OIL.	

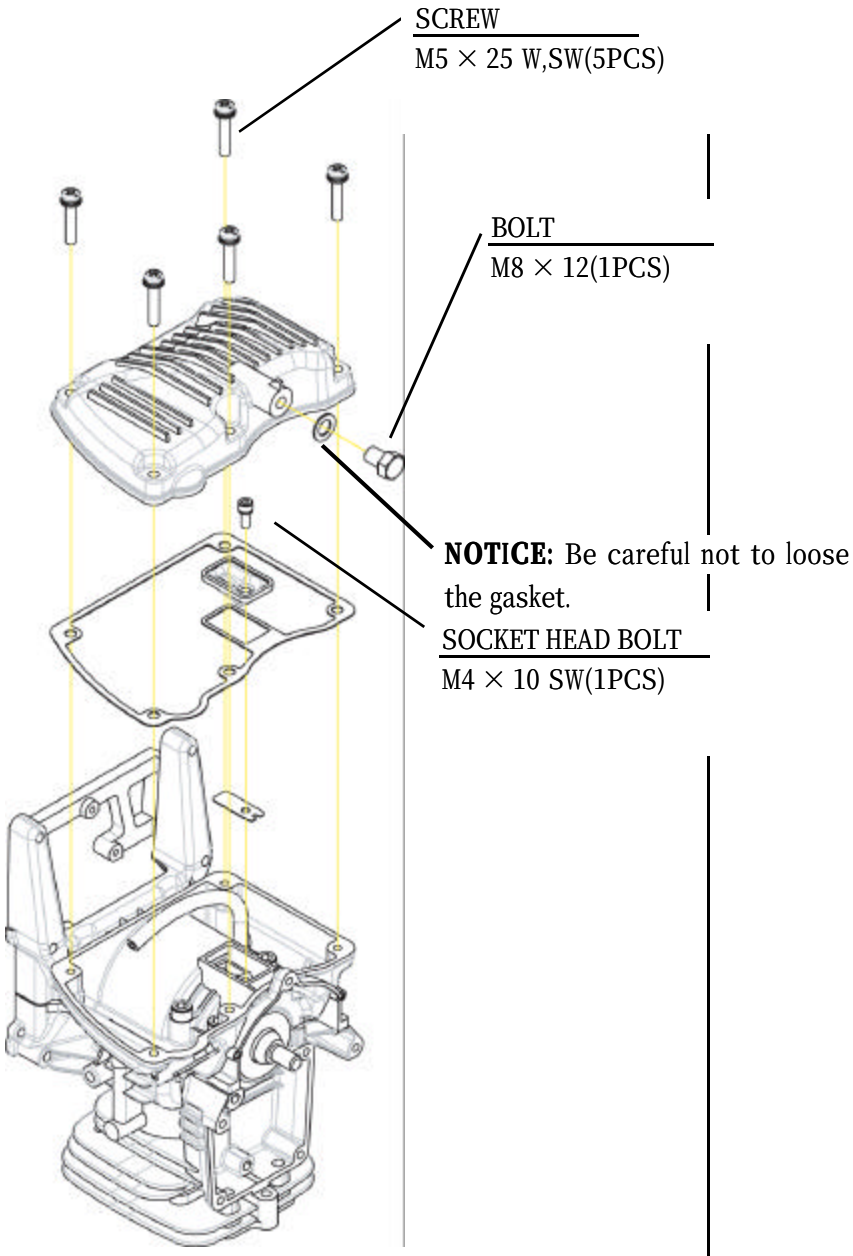

	Part name	Disassembling Instructions	
10	FLYWHEEL COIL	1)Remove the COIL. 2)Remove the FLYWHEEL.	

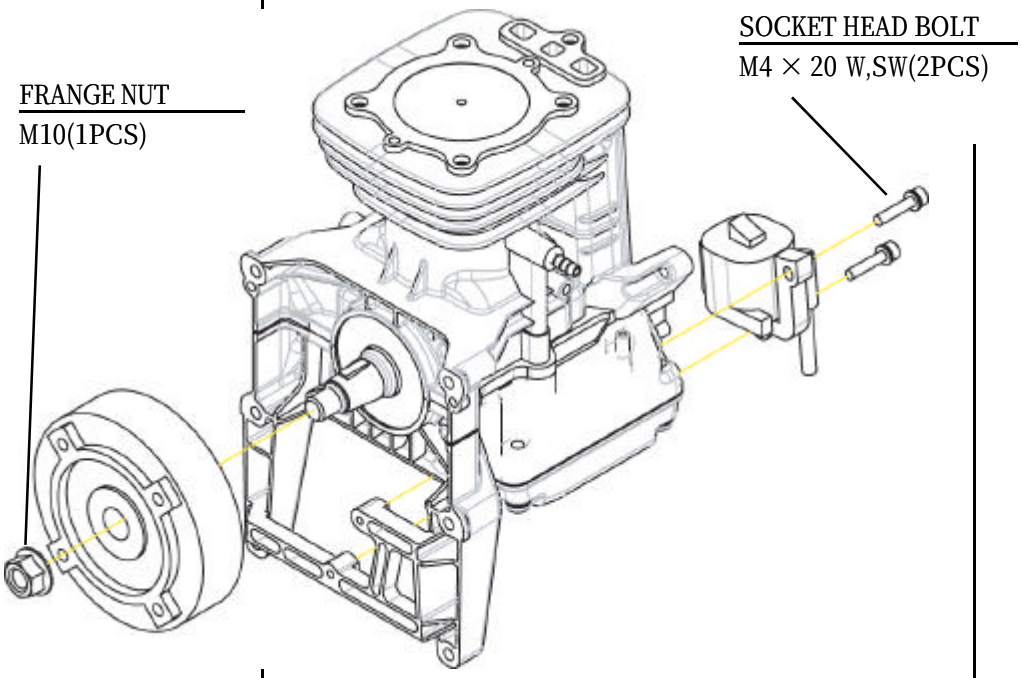

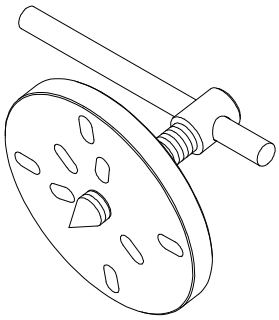

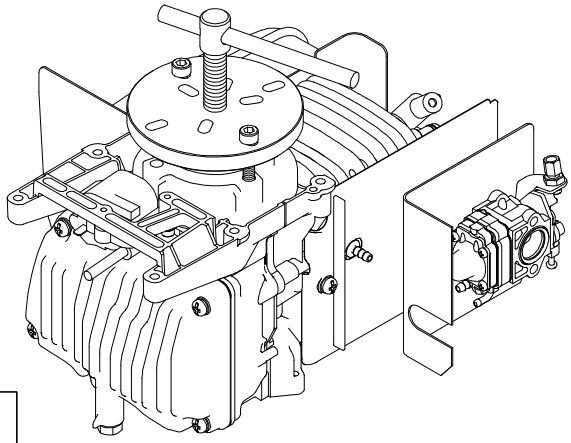

Part number：５９７９００１０００
Tool name ：ＴＯＯＬ
Work：Flywheel Puller

	Part name	Disassembling Instructions	
11	CYLINDER CRANKSHAFT CRANKCASE	1)Ram a flathead screwdriver into the four grooves in turn to remove the CRANKCASE by prying it off with the screwdriver. (see the figure below) 2)Pull the CRANKSHAFT out of the CYLINDER. Be careful not to damage the OIL SEALS. 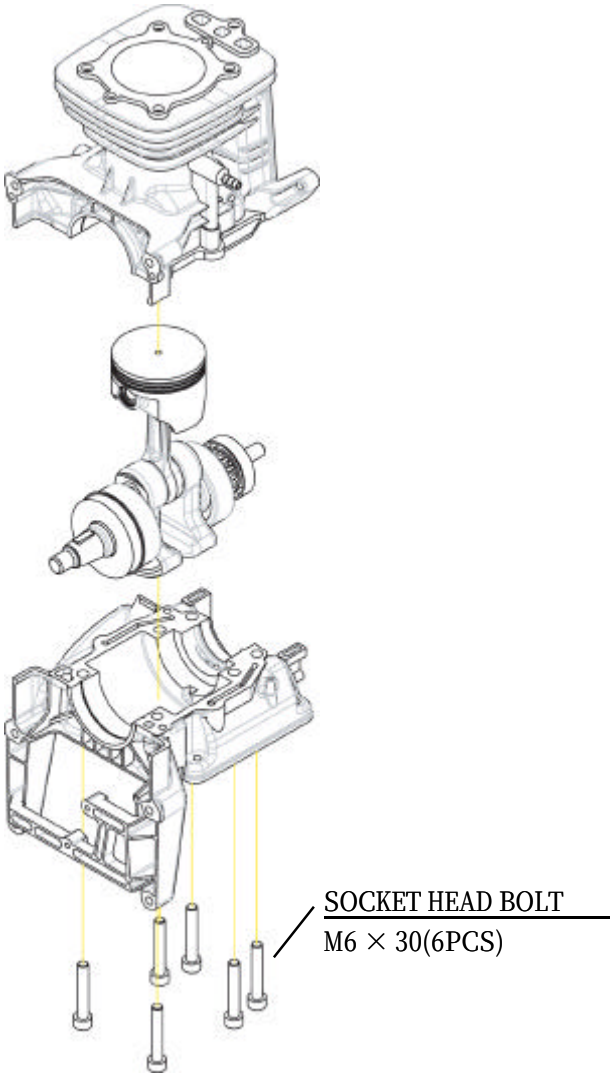 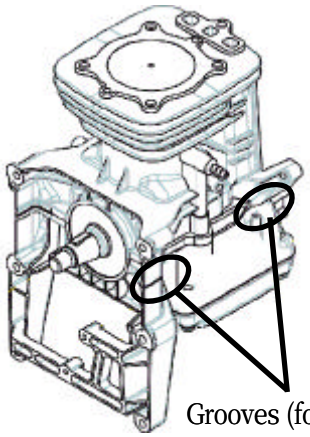 Grooves (four): Used to remove the CRANKCASE (be careful not to damage the sealing surface).	

	Part name	Disassembling Instructions	
12	CRANKSHAFT PISTON PISTON RINGS OIL RING OTHERS	1)Remove the CLIP. 2)Remove the PIN,PISTON. 3)Remove the PISTON RINGS and OIL RING.	

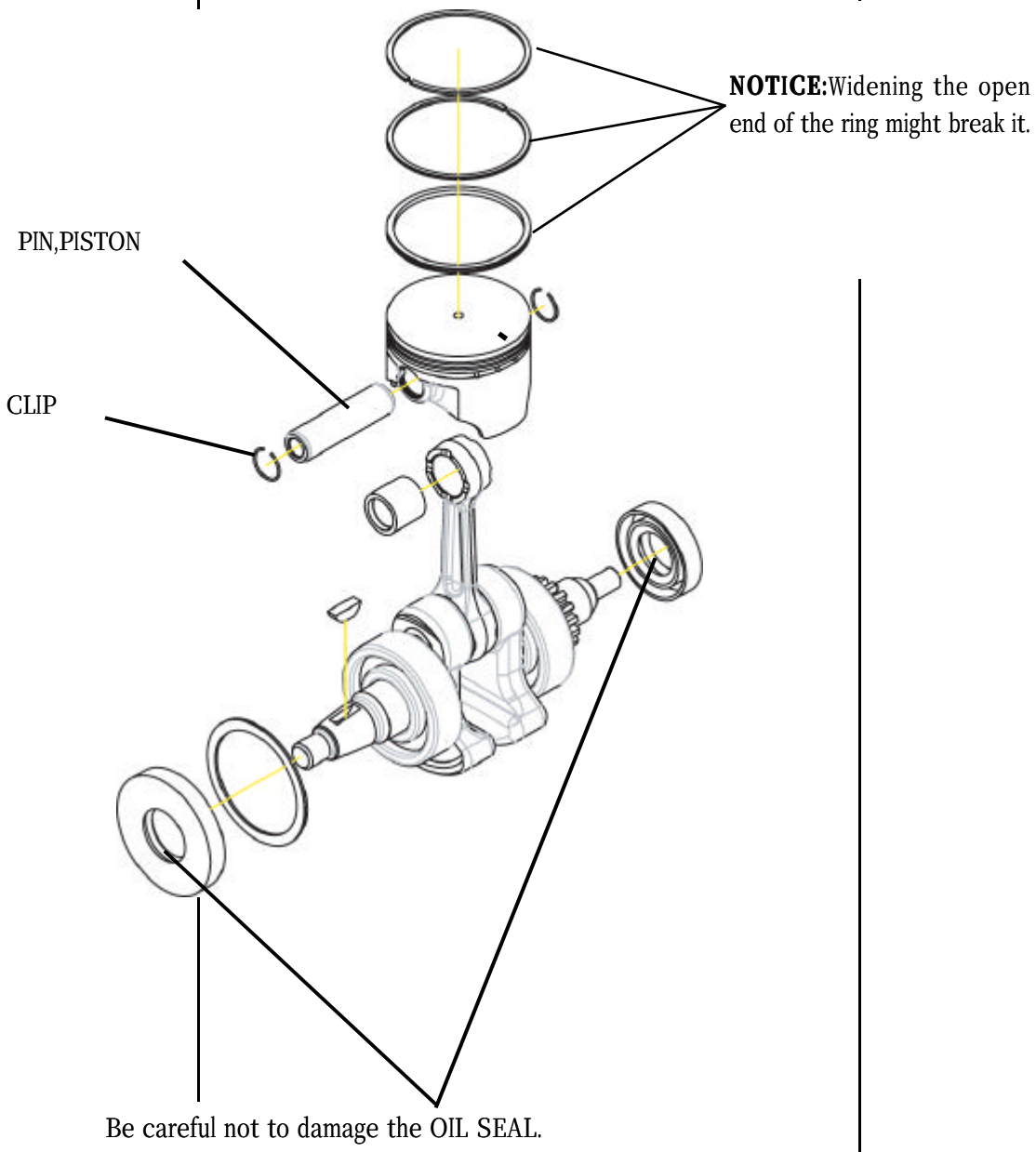

Engine reassembly procedure

1.Notice

•Clean parts completely specifically the PISTON, CYLINDER, CRANKCASE, CRANKSHAFT and BEARINGS.

•Remove completely all the carbon deposit from thr COMBUSTION CHAMBER and the PISTON top.

•Be careful not to damage the mating face between the CYLINDER HEAD and CYLINDER, and the one between the CYLINDER and CRANKCASE, and not to let any foreign material come into them.

•Test the lip of the OILSEALS for damage.Replace damaged OIL SEALS with new ones. Apply oil over the lip before reassembly.

•Replace all GASKETS with new ones.

•Replace PINS and SCREWS with new ones if necessary.

•Tighten up the tightening torque specified parts according to the specified tightening torque.

•Apply 4-stroke engine oil over the rotating portions and sliding surfaces.

•Check and adjust the clearance.

•After reassembling each of the rotatable main parts, rotate by hand to test it for bad movements and abnormal noises.

2.Tightening torque

For further assembling instructions on each part, see the corresponding pages.

No.	Tightening part	The kind of screw	Tightening torque (kgf·cm)	Tightening torque (N・m)	pcs	Notice
6	CRANKCASE ～CYLINDER	M6×30 SOCKET HEAD BOLT	90 ±10	8.8 ±1.0	6	
7	FLYWHEEL	M10 FRANGE NUT	350 +50 0	34.3 +5.0 0	1	
	COIL ～CRANKCASE	M4×20 W,SW SOCKET HEAD BOLT	20 +20 0	2.0 +2.0 0	2	
8	RETANER,PLATE ～CRANKCASE	M4×10 SW SOCKET HEAD BOLT	20 +15 0	2.0 +1.5 0	1	Fasten with the CASE,OIL and GASKET
	BOLT (DRAIN BOLT)	M8×12 BOLT	50 ±10	4.9 ±1.0	1	Be careful not to fail to place the GASKET.
	CASE,OIL ～CRANKCASE	M5×25 W,SW SCREW	40 +15 0	3.9 +1.5 0	5	
9	CYLINDER HEAD ～CYLINDER	M6×30 SOCKET HEAD BOLT	120 +20 -10	11.8 +2.0 -1.0	5	
11	COVER, CAMGEAR ～CYLINDER	M5×16 W,SW SCREW	40 +15 0	3.9 +1.5 0	4	
12	ROCKER COVER ～CYLINDER HEAD	M5×30 W,SW SCREW	40 +15 0	3.9 +1.5 0	2	
13	SPARK PLUG	CMR6A(M10)	110 ±20	10.8 ±2.0	1	
14	MUFFLER ～CYLINDER HEAD	M6×70 SOCKET HEAD BOLT	140 +20 -10	13.7 +2.0 -1.0	3	Be careful not to fail to place the WASHER. Tighten the BOLT again after test run.
15	INSULATOR ～CYLINDER HEAD	M,5×25 W,SW SCREW	40 +15 0	3.9 +1.5 0	2	
	INSULATOR ～CYLINDER	M,5×14 W,SW SCREW	40 +15 0	3.9 +1.5 0	1	
16	CASE,INTAKE ～INSULATOR	M,5×65 W,SW SCREW	20 +20 0	2.0 +2.0 0	2	Fasten with the GASKET CARBURETOR.
17	PULLEY	PULLEY(M10) width across flats 15	90～110	8.8～10.8	1	
18	CAP,OIL		ceremonial handclapping		1	

	Part name	Assembling Instructions
1	CRANKSHAFT PISTON PISTON RINGS OIL RING OTHRS	1)Apply 4-stroke engine oil over the PISTON RINGS and OIL RING after placing them.

Position the open end of TOP RING and SECOND RING in the opposite direction.

SECOND RING
White mark:right

Fit in the PISTON with its "I mark" directed as shown in the figure.

OIL RING assembly order
①SPACER
②LOWER SIDE RAIL
③UPPER SIDE RAIL
Position each open end of the parts in a respectively different position
120-degree.

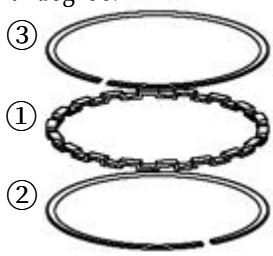

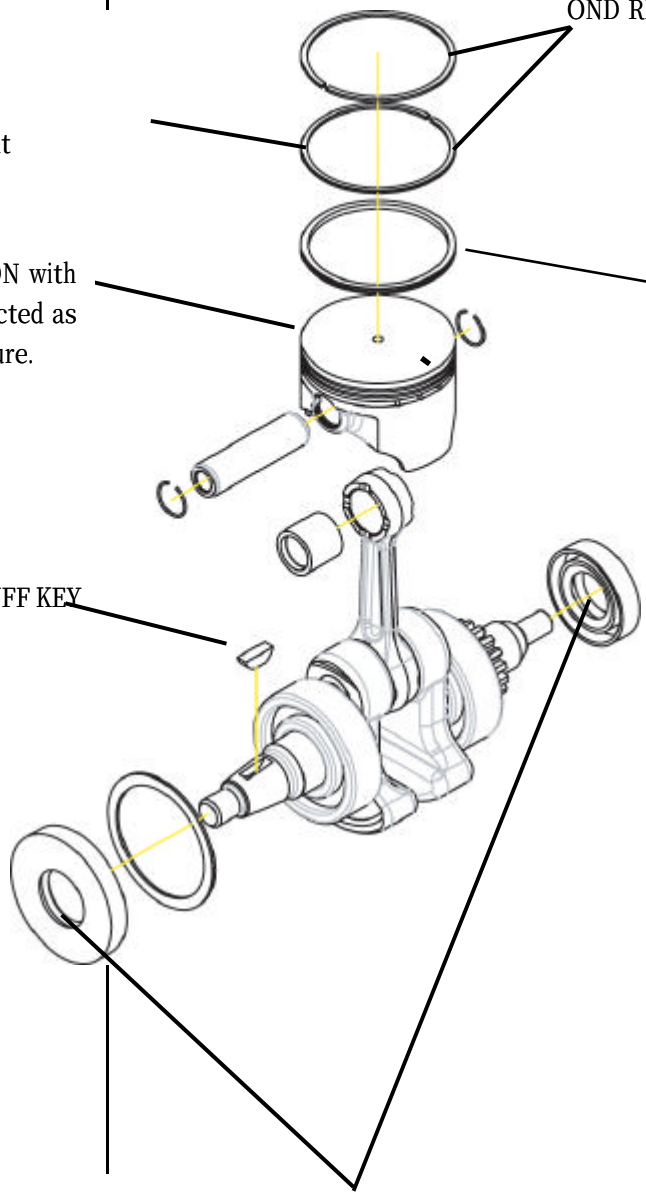

OIL SEALS
Apply grease over the inner part.

	Part name	Assembling Instructions	
3	CYLINDER HEAD	1)Install the VALVE and SPRING,VALVE and RETAINER,SPRING. 2)Install the ROCKER ARM and ROCKER SHAFT. 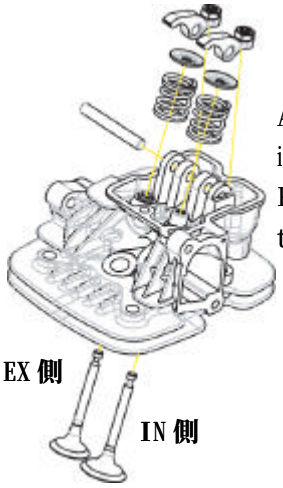 Apply the 4-stroke engine oil over the inner part of VALVE GUIDES and ROCKER SHAFT guides before joining the parts together. Be careful that (the INTAKE VALVE is large and EXHAUST VALVE is small). Apply the 4-stroke engine oil over the VALVE GUIDE holes before inserting VALVE. To insert VALVE into the RETAINER,SPRING hole and slide RETAINER,SPRING while pushing spring. 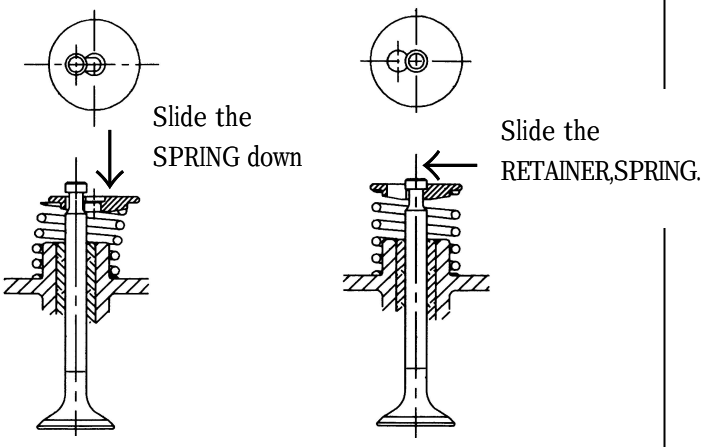 	
4	CYLINDER	1)Install the two CHECK VALVES on the CYLINDER. 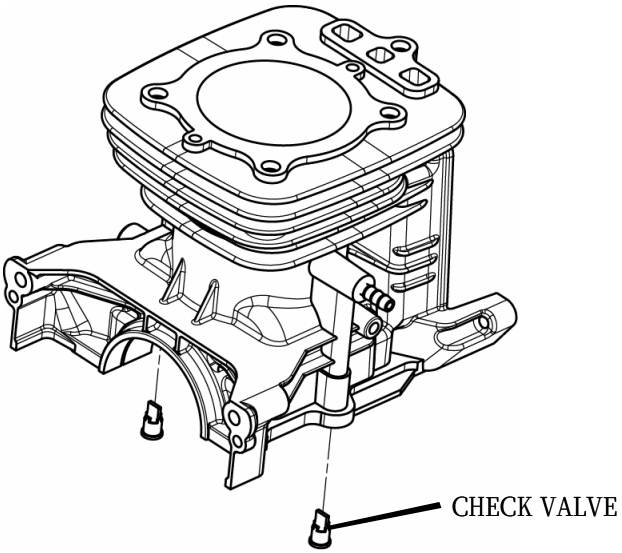 	

	Part name	Assembling Instructions
5	CRANKCASE	1)Insert the OIL TUBE into the pipe of the CRANKCASE. 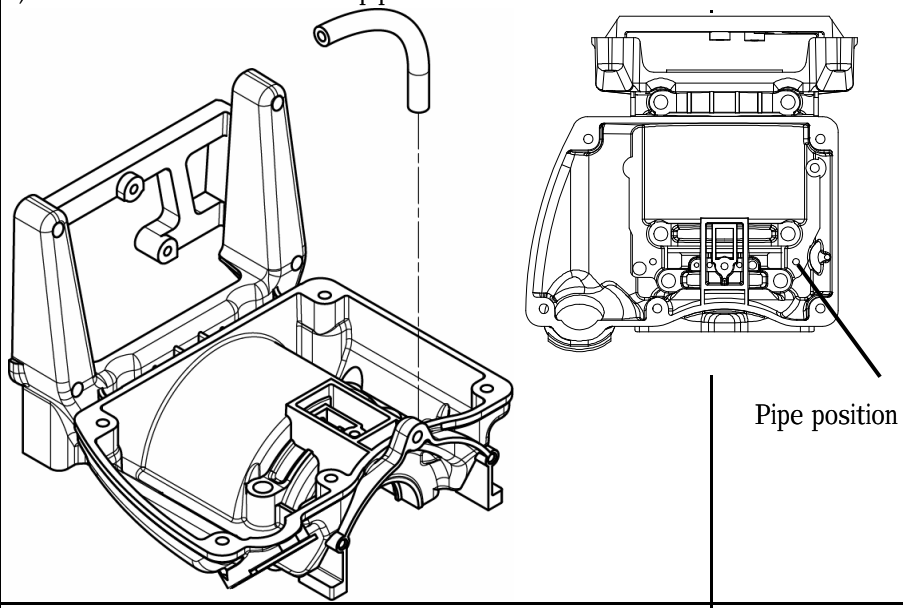
6	CYLINDER CRANKSHAFT CRANKCASE 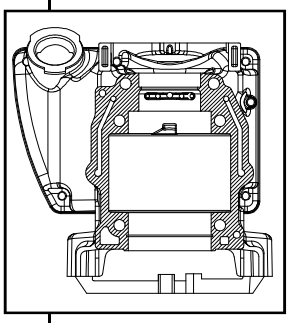	1)Apply the 4-stroke engine oil over the inner wall of the cylinder and sliding surface of the piston. 2)Insert the CRANKSHAFT(PISTON) into the CYLINDER. 3)Apply the silicon system liquid gasket equally over the shaded area of the crankcase as shown in the left figure(ThreeBond 1216 recommended). Be careful not to fill in the grooves and holes with the gasket. 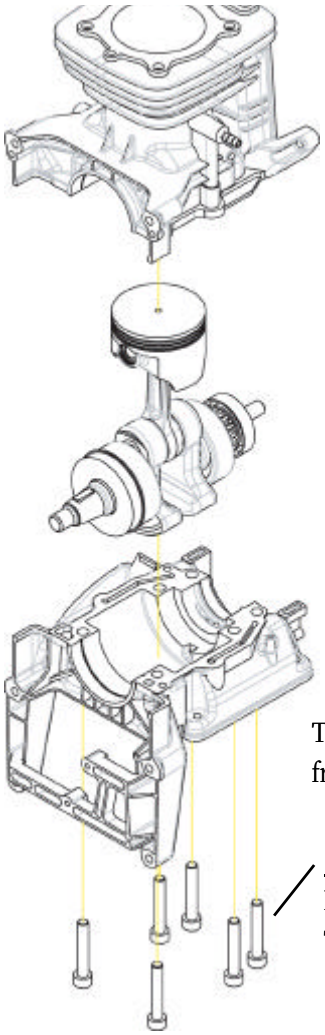 Tightening sequence of the SOCKET HEAD BOLTS. 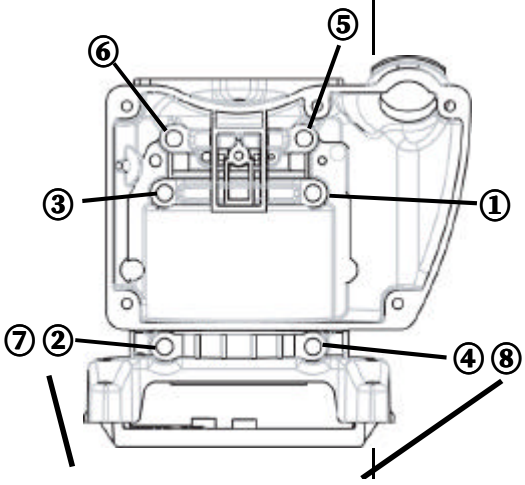 Tighten the BOLTS (② and ④) again. The OIL SEAL should not stick out from the CRANKCASE. SOCKET HEAD BOLT M6 × 30(6PCS) Tightening torque 90 ± 10kgf·cm

	Part name	Assembling Instructions	
7	FLYWHEEL COIL	1)Degrease CRANKSHAFT and FLYWHEEL tapered portion completely before joining them. 2)Attach the SPRING,PLUG CAP to the HIGH-TENSION CODE. 3)Insert the HIGH-TENSION CODE with the SPRING,PLUG CAP into PLUG CAP. 4)Fit the COIL and WIRES in the CRANKASE. (See the figure below. Air gap: 0.3mm).	

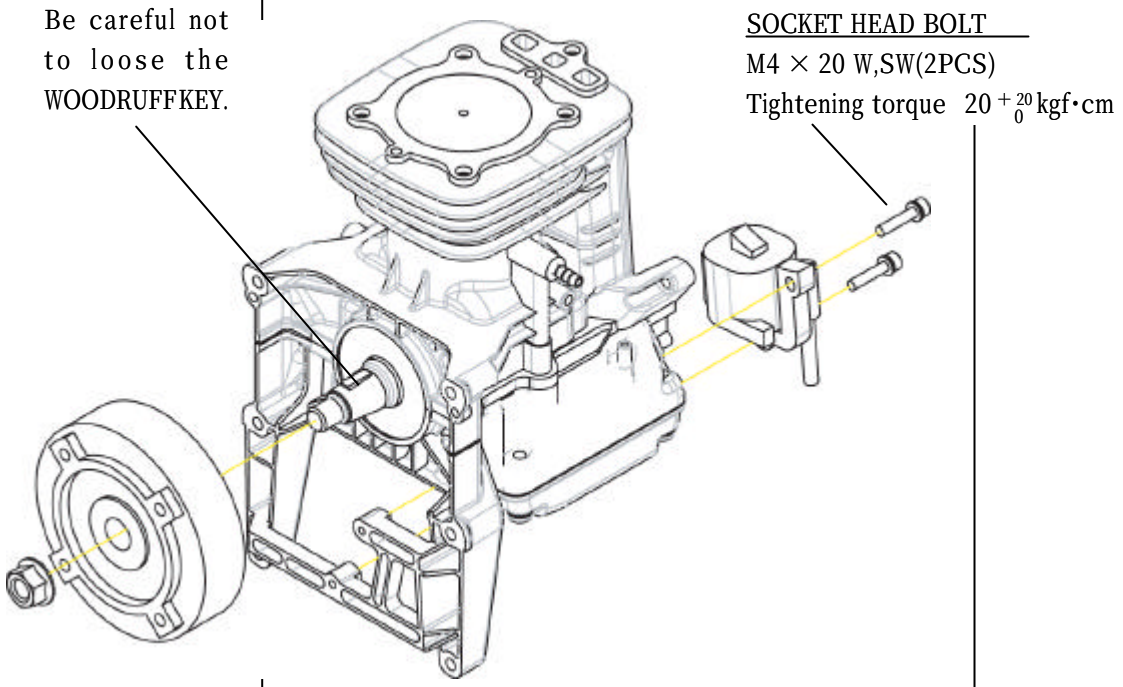

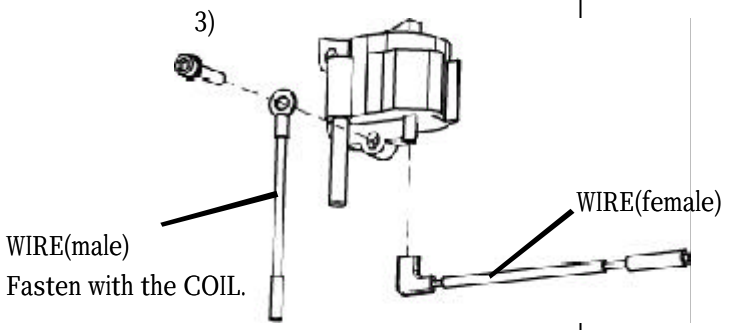

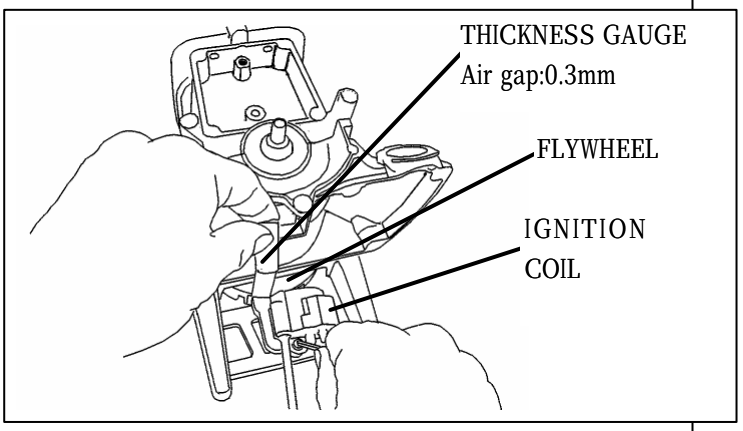

	Part name	Assembling Instructions	
8	CASE,OIL CRANKCASE OTHERS	1)Fit the GASKET,OILCASE , LEAD VALVE and RETAINER,PLATE in the CRANKCASE. 2)Screw the DRAIN BOLT onto the CASE,OIL with the GASKET between them. 3)Join the CRANKCASE and CASE,OIL together.	

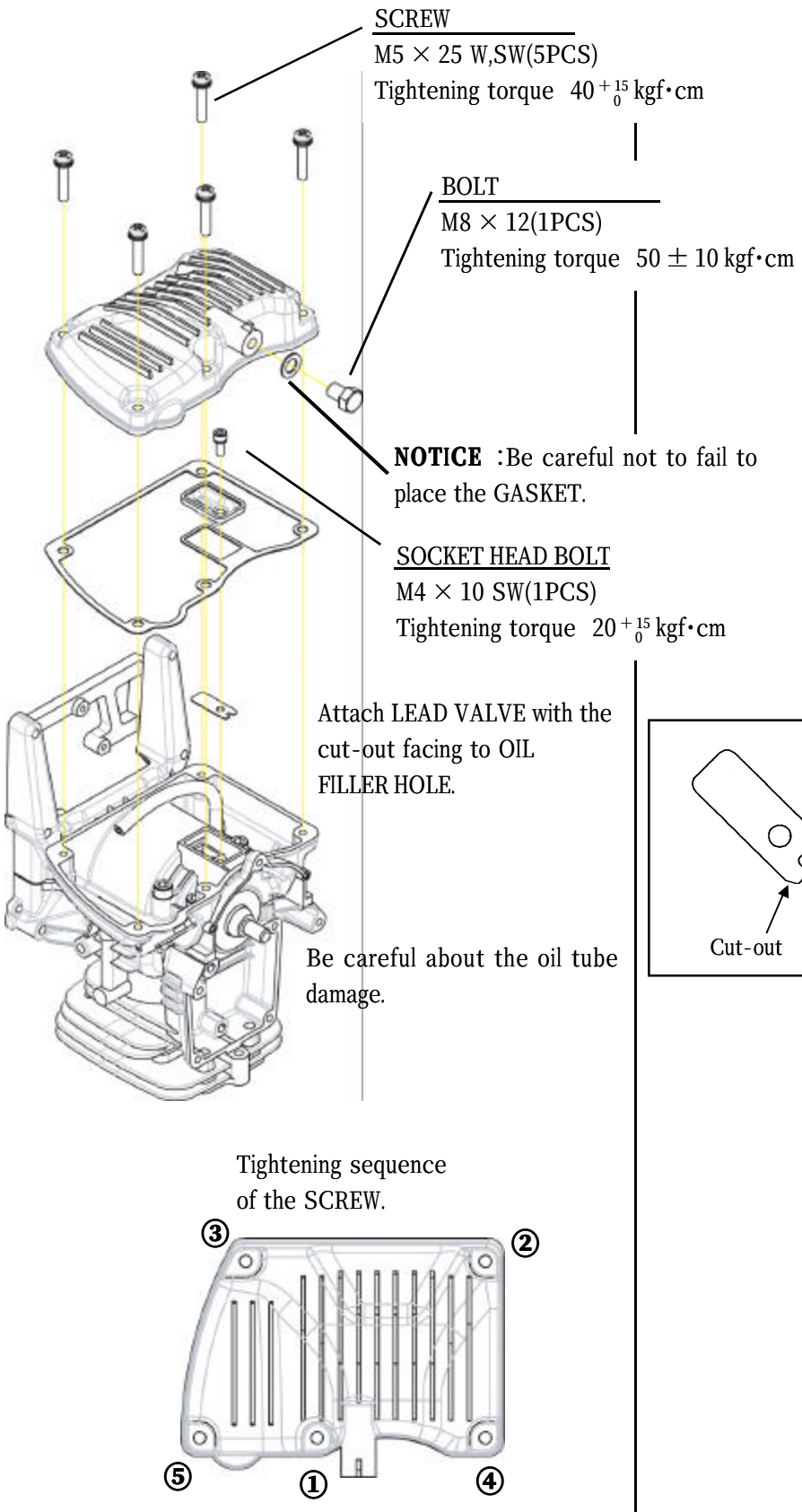

	Part name	Assembling Instructions
9	CYLINDER HEAD	1)Attach the CYLINDER HEAD.

SOCKETHEAD BOLT
M6 × 35 (5PCS)
Tightening torque 120^{+20}_{-10} kgf·cm

GASKET,CYLINDER HEAD

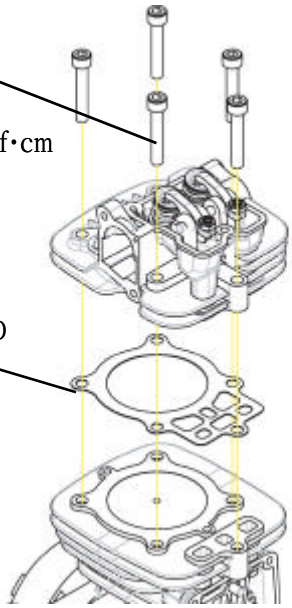

Tightening sequence
of the SOCKET HEAD BOLT.

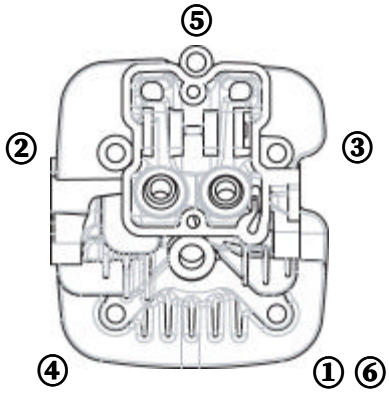

Finally tighten again the BOLT that was tightened first.

10	CAMGEAR CAMLIFTER	1)Position the piston to the top dead center. (Make sure that the FLYWHEEL is placed with its magnetic part on the downside-this can be confirmed with the FLYWHEEL counter mark.) 2)Join CAMGEAR to CRANKGEAR with CAM top facing down vertically. (use the counter mark for reference). 3)Join the CAMLIFTER.

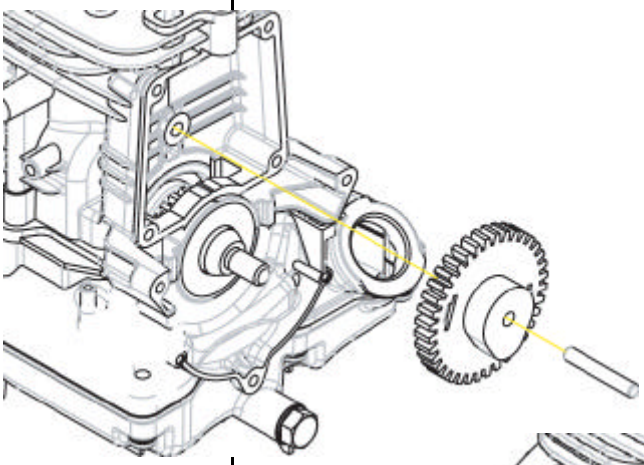

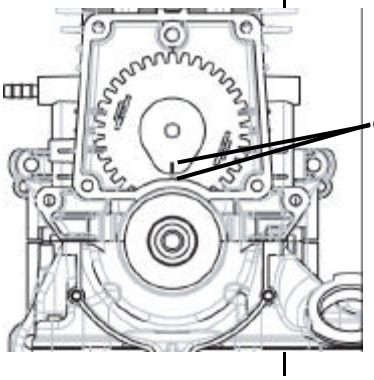

Be careful about the direction of the cam lifters when installing them
(see the figure below).

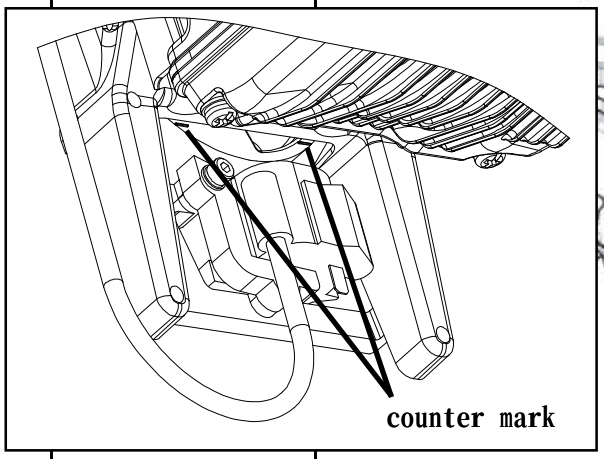

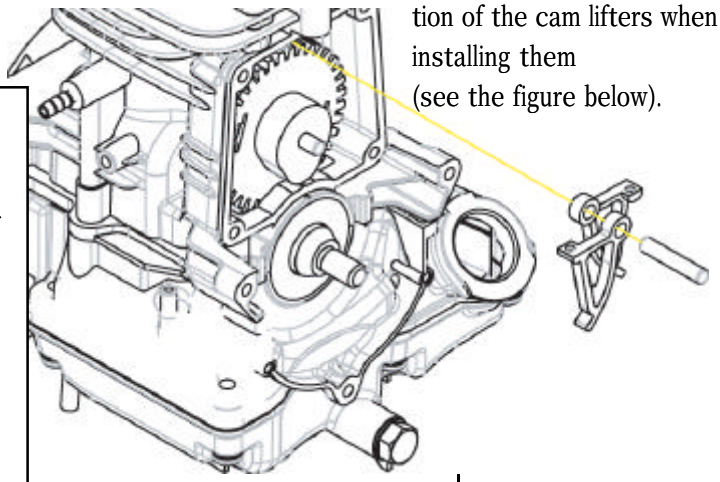

	Part name	Assembling Instructions	
11	PUSH ROD COVER,CAMGEAR VALVE clearance	1)Insert the PUSH ROD into the PUSH ROD passage of the CYLINDER HEAD. 2)Make sure that the PUSH ROD is put into the spherical grooves of the CAM LIFTER and ROCKER ARM adjust bolt. 3)Attach the COVER,CAMGEAR. 4)Loosen NUT and adjust VALVE CLEARANCE by rotating ADJUST SCREW with a hexagon bar wrench.Adjust VALVE CLEARANCE at the compression top dead center(the position of the CAM top and FLYWHEEL should remain in the same one at no.10).Be sure to close the COVER,CAMGEAR before the clearance adjustment. 5)Tighten NUT firmly after the adjustment.	

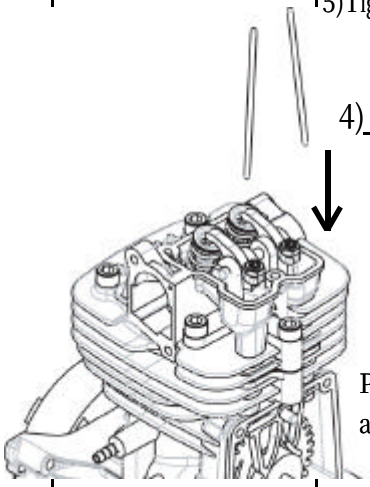

1)
Press the ROCKER ARM and fit in the PUSH ROD.

4) VALVE CLEARANCE :0.15mm

5) NUT
Tightening torque 50^{+15}_{0} kgf·cm

2) Make sure that the PUSH ROD is put into the spherical grooves.

3)

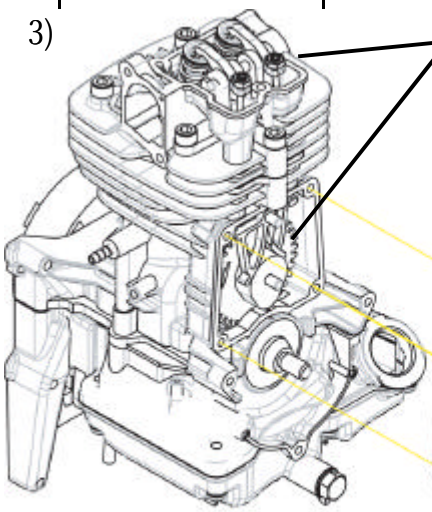

Apply the 4-stroke engine the CAMGEAR, CAMLIFTER and ROCKER ARM.

3)Tightening sequence of the SCREW.

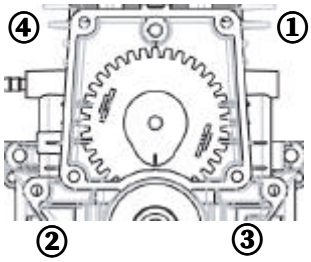

Make sure that the PISTON is positioned to the top dead center before installing the COVER,CAM GEAR.

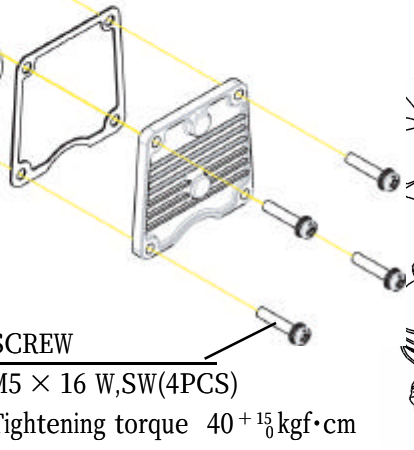

SCREW
M5 × 16 W,SW(4PCS)
Tightening torque 40^{+15}_{0} kgf·cm

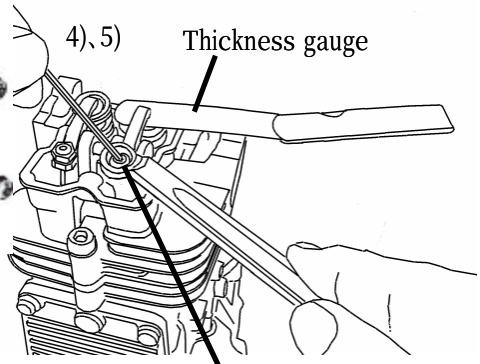

4)、5) Thickness gauge

ADJUST SCREW

	Part name	Assembling Instructions	
12	ROCKER COVER	1)Attach the ROCKER COVER and GASKET,ROCKER COVER. **NOTICE:**The breather should be positioned at the plug side. SCREW M5 × 30 W,SW(2PCS) Tightening torque 40 $^{+15}_{0}$ kgf·cm	
13	PLUG,SPARK	1)Attach the PLUG,SPARK. PLUG,SPARK (M10) Tightening torque 110 $^{\pm 20}$ kgf·cm **NOTICE:** The PLUG,SPARK should be screwed into the threaded screw hole straight.	
14	MUFFLER	1)Attach the MUFFLER and GASKET,MUFFLER. **NOTICE** ：Be careful not to bend the GASKET or fail to place the WASHERS. SOCKET HEAD BOLT M6 × 70(3 本) Tightening torque 140 $^{+20}_{-10}$ kgf·cm Tighten the BOLTS again after the test run.	

	Part name	Assembling Instructions	
15	INSULATOR PIPE,JOINT(T) TUBE(3PCS)	1)Attach the INSULATOR and GASKET,INSULATOR. 2)Fit the TUBES in the CYLINDER using the PIPE,JOINT(T). (use the correct tubes). 3)Connect the TUBE to the INSULATOR at its joint. **NOTICE** :The GASKET should be placed with its smallest hole positioned at the upper right. SCREW M5 × 25W,SW(2PCS) Tightening torque 40^{+15}_{0} kgf·cm Connect the tube to the Air Cleaner breather (see page 20). SCREW M5 × 14W,SW(1PCS) Tightening torque 40^{+15}_{0} kgf·cm Connect the tube to the INSULATOR at its joint.	
16	CARBURETOR CASE,INTAKE	1)Attach the GASKET,CARBURETOR, CARBURETOR and CASE,INTAKE. **NOTICE** :Be careful about the GASKET aspect when installing it. **NOTICE** : Be careful about the gasket damage after installing it. SCREW M5 × 65W,SW(1PCS) Tightening torque 20^{+20}_{0} kgf·cm	
17	PULLEY	1)Attach the PULLEY (Tighten the STARTER together with the COVER,ENGINE using the same SCREWS.) PULLEY 90 ～ 110kgf·cm	

	Part name	Assembling Instructions	
18	CAP,OIL	1)Attach the CAP,OIL. 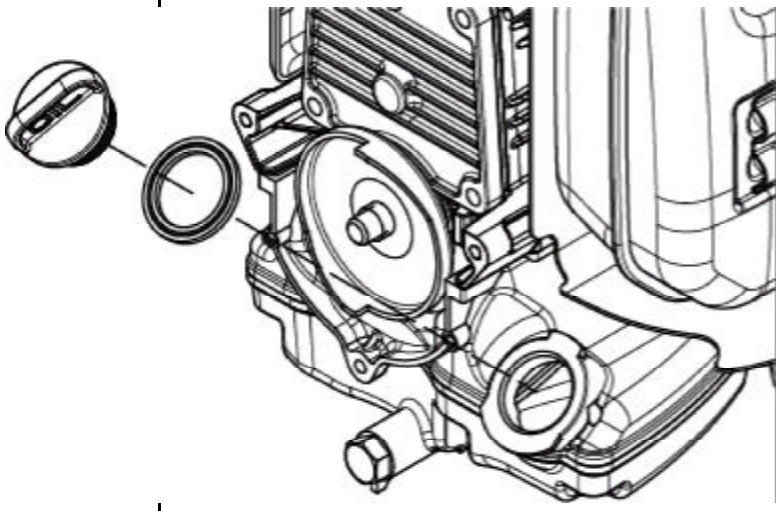 **NOTICE**: Be careful not to fail to place the PACKING or fill the tank with oil.	

5.CARBURETOR DISASSEMBLY AND REASSEMBLY

This engine is equipped with a diaphragm type CARBURETOR.

1) Function and structure of the diaphragm system.

Since the fuel level is kept constant, in spite of any tilt angle of the engine, it can be operated at any position. The float chamber is provided with a diaphragm and covered by a cover. Negative pressure in the air intake passage causes the diaphragm to swell upward and thereby pushing up the hinge to open the valve. Upon the disappearance of the negative pressure, the valve is closed by the spring pressure. Then the fuel flow rate can be controlled by marking an appropriate determination of the diaphragm area and spring pressure.

2) Disassembly and reassembly

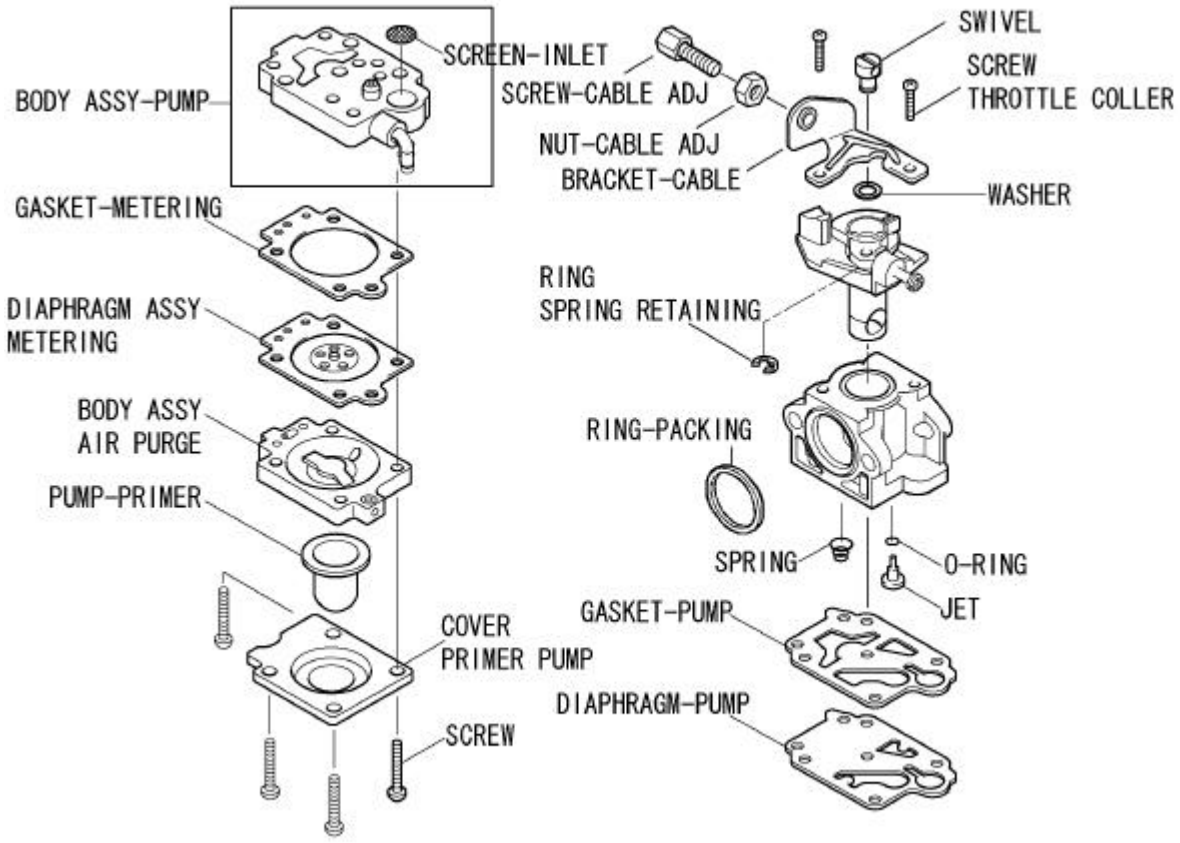

3) Notice

①Clean the CARBURETOR using clean gasoline before disassembly.
②Disassemble or reassemble referring to the deal drawing.
③Do not disassemble the THROTTLE VALVE ASSY and PUMP BODY ASSY.

4) Disassembly and reassembly procedure

①Remove the screw (PUMP COVER)and then the PRIMER PUMP COVER. Remove dust clearly from the PRIMER PUMP if any.
②Remove the PUMP BODY ASSY from the body (do not let the SPRING missing). Remove dust clearly from the INLET SCREEN if any.
③Remove the JET from the body.
④Remove the SCREW (THROTTLE COLLAR)and then THROTTLE VALVE ASSY from the body.
⑤Reassemble the JET and SPRING firmly when reassembling the CARBURETOR.

5) Checking procedure

①Clean the body using gasoline and blow it clearly with compressed air.
②Test the JET for dust and corrosion. The dust needs cleaning and blowing with compressed air and corrosion replacing with new one. (Note: The new JET should have the same number with that of the old one.)
③Test the GASKETS for deformation and breakage. Replace bad gaskets with new ones if any.
④The PUMP(DIAPHRAGM) should not be hardened or damaged.
⑤The INLET VALVE and the OUTLET VALVE should be flat and not bent.
⑥The DIAPHRAGM ASSY should be free of any hardening, damage or bend.
⑦After cleaning the PUMP BODY ASSY, test it for deformation of the METERING LEVER and METERING LEVER SPRING, height of the METERING LEVER, dust stuck to the INLET SCREEN, and VALVE leakage, etc. To check the MAIN CHECK VALVE for its correct operation, place a vinyl or rubber hose at its end on the CHECK VALVE portion from the JET side and breath it at the other end.
If you cannot breathe it and valve closes when you breathe it in, it works correctly. If not, immerse it in gasoline for about 10 minutes and then repeat the procedure described above. If the VALVE cannot be fixed even by doing this, replace it with a new PUMP BODY ASSY. (Note: Do not blow the MAIN CHECK VALVE with compressed air. If you use an air gun, keep it about 30cm away from the valve when the compressed air has a pressure of 6kg/cm^2).
⑧Test the PRIMER PUMP for any hole, breakage and abnormal hardening. Make sure that the COMBINATION VALVE works correctly.

6) Marks on CARBURETOR

Marks are stamped on the CARBURETOR as shown in the right figure:
①Model No.
②Date of manufacture

Example)① :WYK260
② :630 (July 24 to July 30,2006)
└─ Week 30 (what week number in the year)
└─ Last digit of the year

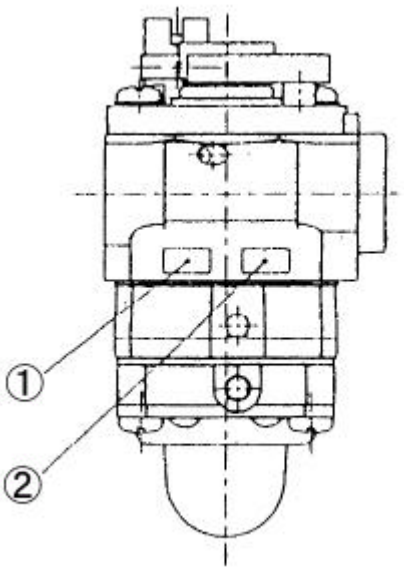

6. RECOIL STARTER

The RECOIL STARTER rarely malfunctions under normal use. When it fails, however, or needs greasing, disassemble and reassemble it according to the following procedure.
Tools: Screwdriver and pliers

1) Disassembly

(1) Remove the RECOIL STARTER from the engine.

(2) Pull out the STARTER KNOB, press the ROTARY REEL with your thumb as shown in Fig.6-1 when the REEL cut-out comes to the STARTER ROPE OUTLET, and pull the STARTER ROPE to the inside of the RECOIL STARTER with a screwdriver. Using the cut-out, rewind the REEL to the direction of the arrow until it stops by controlling the rotation of the REEL with your thumb.

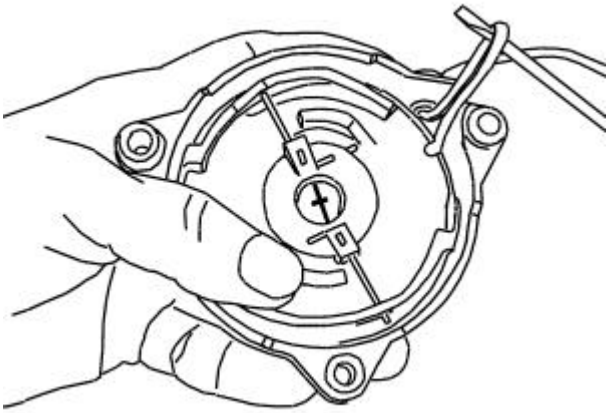

Fig.6-1

(3) Remove the parts as shown in Fig.6-2.
Remove the REEL slowly by turning it back and forth gently in a way that SPIRAL SPRING will not come away from the REEL.
(Be sure to wear a piece of protective glasses during disassembling to protect against a danger caused by possible spiral spring 's coming away. If the spiral ring flies out, fit it correctly into the groove according to the procedures as shown in Fig. 6-6.)
Untie the STARTER ROPE knot at the REEL end and take it away to complete the disassembly.

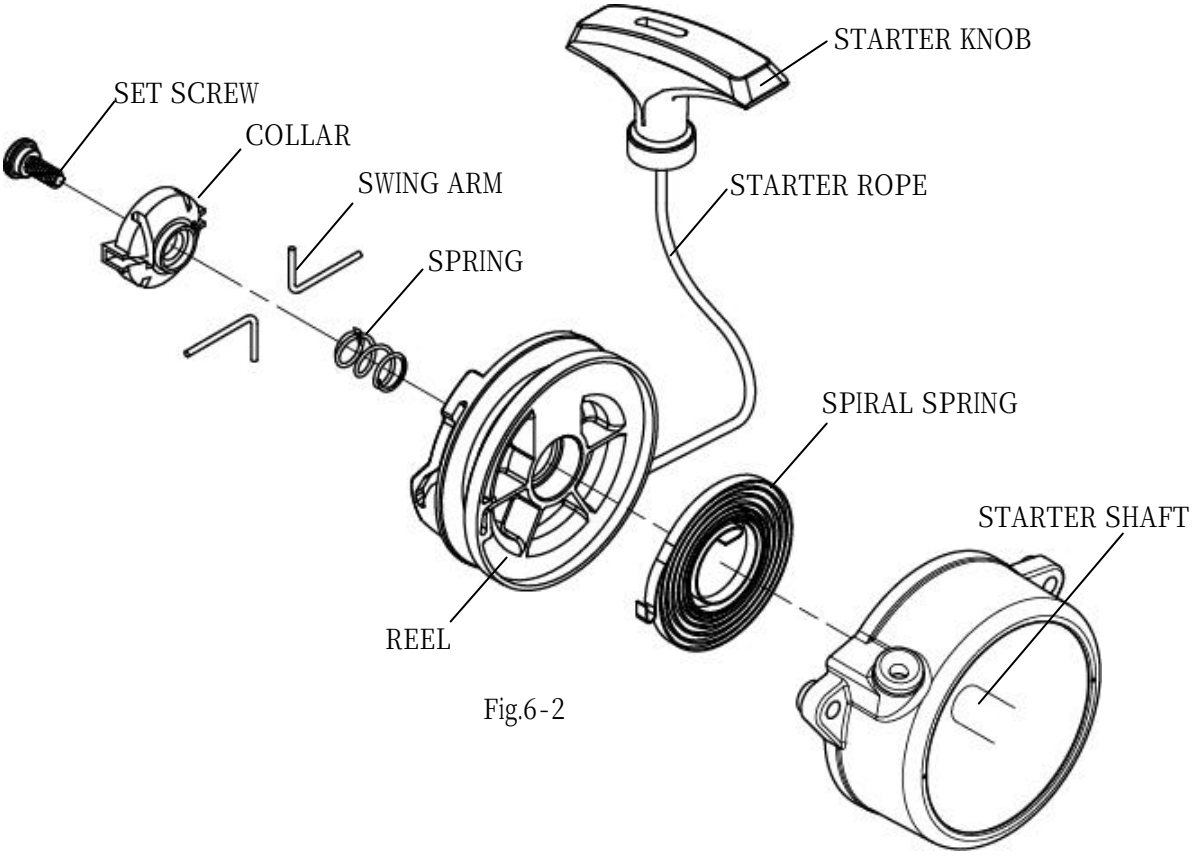

Fig.6-2

2) Reassembly

(1) Run the STARTER ROPE through the STARTER KNOB and make an overhand knot as shown in Fig.6-3.Run the STARTER KNOB at its opposite side from the STARTER CASE to the REEL, make a knot in the same way, and put the ROPE end completely in the ROPE HOUSING of the REEL. Then, apply a small amount of grease over the STARTER SHAFT and SPIRAL SPRING.

(2) Make sure that the SPIRAL SPRING is fit completely in the spring groove of the REEL. Form the SPRING end to have 1 to 2 mm clearance between the SPIRAL SPRING inner end and REEL BUSH so that the STARTER SHAFT can hook on the HOOK securely as shown in Fig.6-4. The SPIRAL SPRING inner portion (about 10cm-long from the end) can be charged in shape.

(3) Before inserting the REEL in the STARTER CASE, wind the STARTER ROPE around the REEL three turns in the direction of the arrow shown in Fig.6-5,draw out the third turn of the STARTER ROPE from the REEL ct-out, and fit the REEL completely inside the STARTER CASE so that the SPIRAL SPRING inner end can hook on the hook. Then, hold the STARTER ROPE as shown in Fig.6-5, and twist the REEL 4 to 5 turns in the direction of the arrow using the REEL cut-out. After the completion of winding, of the STARTER ROPE hold the REEL tightly to prevent the STARTER ROPE from winding back, pull the STARTER KNOB in order for the SPIRAL ROPE to tighten and then release the STARTER KNOB slowly. Reassemble the parts in reverse order of disassembly shown in Fig.6-2.Tighten the SETSCREW firmly.

※Be sure to perform the following procedure in order to make sure that the parts have been fit completely.

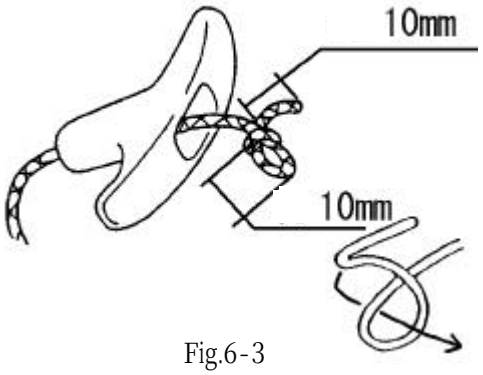

Fig.6-3

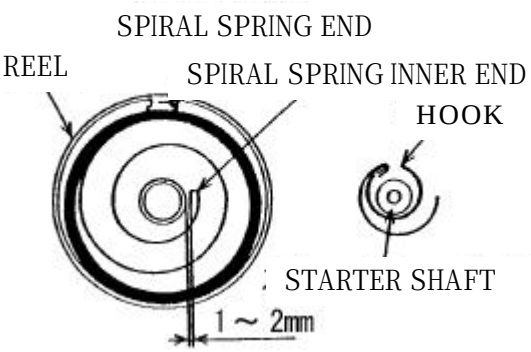

Fig.6-4

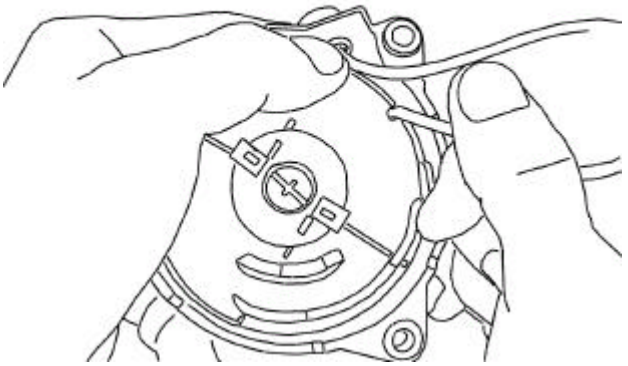
Fig.6-5

3) Check after reassembly

(1) Pull the STARTER KNOB a few times:

① If the STARTER KNOB is too heavy to pull, check the associated parts whether they have been reassembled as instructed.

② If the RATCHET fails to function, check whether the parts such as the spring have been missing.

(2) Pull the STARTER KNOB to pull out the STARTER ROPE to the end:

① Unwind the STARTER ROPE 1 to 2 turns in the way as shown in Fig.6-1,since the SPIRAL , SPRING may be over-stressed if the STARTER ROPE still remains in the rope groove.

② If the STARTER ROPE is found weak to move back, or the STARTER KNOB droops when you let it go, apply grease over the rotating and friction parts. If it does not recover, pull the STARTER KNOB such that the STARTER ROPE is pulled by 1 to 2 turns.(In this instance, make sure in the way described above that the SPIRAL SPRING is not over-stressed.)

③ If the SPIRAL SPRING comes away with a sound and the STARTER ROPE will not be moved back, reassemble the RECOIL STARTER from the beginning.

4) Other notice

(1) When the SPIRAL SPRING fly out:

Make a ring having a smaller diameter than that of the SPIRAL SPRING housing by a thin wire. Hook the SPIRAL SPRING at its outer end on the ring to wind it as shown in Fig.6-6,and fit it into the SPIRAL SPRING groove. Press the SPIRAL SPRING with your finger to prevent it from coming away and remove the ring slowly. The ring can easily be removed by prying it with the tip of a screwdriver. See Fig.6-4 for how to fit the SPIRAL SPRING correctly into the groove.

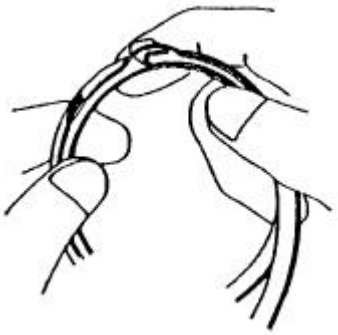

Fig.6-6

(2) At off-season and disassembly:

Apply grease (heat-resistant type is preferable)over the rotating and friction parts at the end of the season and at disassembly.

(3) When the SWING ARM does not move smoothly: When the SWING ARM does not move smoothly:

Apply grease over the SWING ARM end and in the vicinity of place along which the end slides.(Shell Albania No.3)

IV. MALFUNCTION AND REPAIR

Trouble		Work order	Point to be checked	Action to be done: Without problem	Action to be done: With problem
Engine does not start.	CRANKSHAFT does not rotate	1－1	Does the CRANKSHAFT rotate by pulling the RECOIL STARTER?	Yes 2－1	No 1－2
		1－2	Any breakage in the RECOIL STARTER?	No 1－3	Repair the RECOIL STARTER. See P50～52
		1－3	Does the FLYWHEEL touch somewhere?	No 1－4	Is the clearance between the FLYWHEEL and COIL within the criterion (tolerance: 0 3 ± 0 1)? Remove foreign material such as gravel if any. See P41
		1－4	Does the CRANKSHAFT rotate by rotating the FLYWHEEL by hand?	Yes 1－1	Disassemble the engine to investigate. 1－5
		1－5	Remove the rocker cover and COVER, CAMGEAR to test the CAMGEAR, etc. for defects.	No defect 1－6	Repair the VALVE, ROCKER ARM, PUSH ROD, CAMLIFTER and CAMGEAR if any defects were found. See P30～32(disassemble), P43～45(reassemble)
		1－6	Any defect in the CRANKSHAFT (bearing) and/or does the PISTON seize up?	Disassemble the whole engine. Breakage of the bearings of the CRANKSHAFT and ROD, CONNECTING, and/or problem such that the PISTON seizes up are likely.	
	PLUG and COIL	2－1	Is the STOP SWITCH ON?	Yes 2－2	Switch the STOP SWITCH to ON.
		2－2	Remove the PLUG, SPARK and ground it. Does it ignite if the RECOIL STARTER is pulled?	Yes 3－1	No 2－3
		2－3	Is the plug gap within 0.7～0.8 ?	Yes 2－4	Adjust the plug gap within the criterion by moving the outer electrode. Replace it with a new one if necessary.
		2－4	Is the PLUG dirty with carbon and/or gasoline?	No 2－5	Clean the PLUG with gasoline and dry it. Remove carbon,etc.by a wire brush. After this clean the PLUG with gasoline again and dry it.
		2－5	Is the gap between the COIL and FLYWHEEL within(0.3±0.1)?	Yes 2－6	Adjust the gap within 0.3±0.1. See P41
		2－6	Does a new grounded PLUG ignite?	Yes Start the engine.	No 2－7
		2－7	Replace the IGNITION COIL with a new one.	Replace the IGNITION COIL with a new one.	
	Fuel	3－1	Any gasoline in the TANK, FUEL? Have you pushed the primer pump to feed the gasoline to the CARBURETOR?	Yes 3－2	Fill the TANK, FUEL with gasoline. Push the primer pump to feed the gasoline to the CARBURETOR.
		3－2	Have you pull the RECOIL STARTER with the choke closed at low temperature? (The engine will not start with thick air-fuel mixture at low temperature.)	The engine has started.	The engine does not start. 3－3
		3－3	Does the engine start by pulling the RECOIL STARTER with the throttle lever half-open?	The engine has started.	The engine does not start yet. 3－4
		3－4	Are the fuel filter and/or tube clogged? Is the tube bent?	No trouble in the fuel passage. 3－5	Correct the causes of bad fuel flow. Replace faulty parts with new ones if necessary.
		3－5	Is the gasoline fresh?	Yes 3－6	Gasoline stored in a bad way goes bad quickly. Old gasoline should be replaced with new one.
		3－6	Disassemble the CARBURETOR to test it for the component parts being clogged up and/or deteriorated.	Clean the inside of the CARBURETOR, and replace wear out parts with new ones if necessary. See P48～49	
	Insufficient compression	4－1	Pull the RECOIL STARTER to check for proper compression in the combustion chamber.	Properly compressed 5－1	Compressed insufficiently. 4－2
		4－2	Pull the RECOIL STARTER swiftly 10-20 times with the choke open to start the engine.	The engine has started.	Still compressed insufficiently. 4－3
		4－3	Remove the PLUG. Pull the RECOILSTARTER swiftly 30-50 times. Screw the PLUG and start the engine.	The engine has started.	Still compressed insufficiently. 4－4
		4－4	Remove the ROCKER COVER to check whether the valve clearance is within 0.08～0.40(criterion:0.1－0.15)	The valve clearance is within the criterion. 4－5	Adjust the valve clearance at 0 15 See P61～62
		4－5	Test the CAMGEAR for any ablation of the cam top.	No ablation 4－6	Any ablation of the cam top needs replacing the CAMGEAR with a new one. See P30～32(disassemble), P43～45(reassemble)
		4－6	Is the CAMGEAR timing right? (The timing mark of the CAMGEAR faces down vertically when the PISTON is at the top dead center.)	Yes 4－7	Correct the bad CAMGEAR timing. See P43～45
		4－7	Disassemble the whole engine to check whether any carbon remains attached to the valve face and/or the inside of the combustion chamber.	No carbon attached 4－8	Remove any attached carbon, if any.
		4－8	Test the CYLINDER bore and PISTON RING for marked ablation and/or damage.	No ablation or damage 5－1	Marked ablation and/or damage needs replacing the CYLINDER and/or PISTON RING with a new one.
	Unknown causes	5－1	Ask a serviceman without known cause of the engine trouble.		
Poor acceleration and output shortage of engine	Work load	6－1	Is the engine overloaded?	Correct workload 6－2	Ask a serviceman for the correct workload.
	Fuel	6－2	No gasoline in the TANK, FUEL? Have you pushed the primer pump to feed the gasoline to the CARBURETOR?	Yes 6－3	Fill the TANK, FUEL with gasoline. Push the primer pump to feed the gasoline to the CARBURETOR.
		6－3	Are the fuel filter and/or tube clogged up? Is the tube bent?	No trouble in the fuel passage. 6－4	Correct the causes of bad fuel flow. Replace faulty parts with new ones if necessary.
		6－4	Is the inside of the AIR CLEANER dirty with dust and/or oil?	No 6－5	Dirty AIR CLEANER inside causes bad engine shaft revolution because air cannot be breathed well. See P．36～37．

Trouble		Work order	Point to be checked	Action to be done	
				Without problem	With problem
Poor acceleration and output shortage of engine	Fuel	6－5	Does air-fuel mixture leak from the mating faces of the CARBURETOR, INSULATOR etc.?	No 6－6	Investigate the leakage and correct it. Replace the packing, etc.with a new one if necessary.
		6－6	Disassemble the CARBURETOR to test it for the component parts being clogged up and/or deteriorated.	No trouble in the CARBURETOR 6－7	Clean the inside of the CARBURETOR. Replace wear out parts, such as the diaphragm with new ones. Replace the CARBURETOR with a new one if necessary. See P. 48～49
	Valve train	6－7	Remove the ROCKER COVER to check whether the value clearance is within 0.08-0.40(criterion:0.15).	The valve clearance is within the criterion 6－8	Adjust the valve clearance at 0.15. See P61～62
		6－8	Test the CAMGEAR for any ablation of the cam top.	No ablation 6－9	Any ablation of the CAM top needs replacing the CAMGEAR with a new one. See P30～32(disassemble)、P43～45(reassemble)
		6－9	Is the CAMGEAR timing right? (The timing mark of the CAMGEAR faces down vertically when the piston is at the top dead center.)	Yes 6－10	Correct the bad CAMGEAR timing. See P43～45
	Insufficient compression	6－10	Pull the RECOIL STARTER to check for proper while the engine stops. Compression in the combustion chamber Does the compression seem to be insufficient?	No 6－11	Compressed insufficiently. Return to work order 4－2 to get the proper compression in the combustion chamber.
	Plug and Ignition	6－11	Does the PLUG ignite sufficiently?	Yes 6－12	The plug ignites insufficiently. Return to work 2－3 to get the sufficient spark.
	Cooling	6－12	Is the cooling air passage clogged up at its inlet with dart? Has the engine over-heated consequently?	No 6－13	Remove the dart to get the good cooling air flow.
	Unknown case	6－13	Ask a serviceman without known cause of the engine trouble (poor acceleration and/or output shortage).		
	Oil care	7－1	Was it confirmed at the pre-operation check that the engine oil tank was filled with engine oil of 220cc?	Yes 7－2	If the oil level is over 220cc drain the oil from the engine oil tank or if less 70cc fill the oil tank with engine oil, to the level of 220cc. See P60
		7－2	Is the engine oil consumed over 5cc an hour?	No	Yes 7－3
	Others	7－3	Does the engine oil leak from the OIL CAP, etc.?	No 7－4	Perform work orders 8－1, 8－2 and 8－5 when a fairy large amount of leaked oil is found around the CAP,OIL.
	Abrasion and damage	7－4	Disassemble the whole engine. Test the CYLINDER bore for marked ablation and/or damage.	No ablation or damaged 7－5	Marked ablation and/or damage needs replacing the CYLINDER with a new one.
		7－5	Test the PISTON for marked abrasion and/or damage.	No ablation or damaged 7－6	Marked ablation and/or damage needs replacing the PISTON with a new one.
		7－6	Test the PISTON RING for marked abrasion.		Marked abrasion needs replacing the PISTON RING with a new one. See P36(disassemble)、P38(reassemble)
Oil leak from engine	Oil and engine care	8－1	Is the CAP, OIL tightened?	Yes 8－2	Tighten the CAP, OIL.
		8－2	Was the engine oil spilled onto the equipment at feeding and/or changing oil?	No 8－3	Be careful not to spill the engine oil around the equipment at feeding and/or changing. If spilled, wipe off the equipment.
		8－3	Is the inside of the AIR CLEANER cleaned before operation?	Yes 8－4	Be sure to clean the inside of the AIR CLEANER before operation. The inside of the AIR CLEANER easily gets dirty with the engine oil. See P63
	Engine care	8－4	Is the PLATE, SEPARATOR in the AIR CLEANER loose?	No 8－5	If loose: ? Fasten the OIL SEPARATOR to the bottom, or ? Replace the OIL SEPARATOR with a new one (6676500600)
		8－5	Is the gasket (rubber packing) of the CAP,OIL stiff?	No 8－6	Replace the gasket with a new one(0213229980) A gasket used for long time is likely to get stiff, which causes an oil leak.
		8－6	Is the gasket used with the oil drain bolt placed, and/or is there any crack on it?	No 8－7	Be careful not to loose the GASKET. Replace the gasket with a new one if crack on it (0037008000)
		8－7	Is any screw in the engine loose?	No 8－8	Tighten loose screws again.
	Working surroundings	8－8	Is the operation being done in an unusual place and/or work method?	No 8－9	Operate the equipment in an appropriate way for the operation in an unusual place and/or work method. Ask a serviceman for the appropriate way.
	Unknown cause	8－9	Ask a serviceman without known cause of the oil leak.		
Clouds of white smoke come out of muffler during operation.	Oil care	9－1	Was it confirmed at the pre-operation check that the engine oil tank was filled with engine oil of 220cc ?	Yes 9－2	If the oil level is over 220cc drain the oil from the engine oil tank or if less 70cc fill the oil tank with engine oil, to the level of 220cc. See P60
	Working surroundings	9－2	Is the operation being done in an unusual place and/or work method?	No 9－3	Operate the equipment in an appropriate way for the operation in an unusual place and/or work method. Ask a serviceman for the appropriate way.
	AIR CLEANER care	9－3	Is the inside of the AIR CLEANER cleaned before operation?	Yes 9－4	Be sure to clean the inside of the AIR CLEANER before operation. The inside of the AIR CLEANER easily gets dirty with the engine oil. See P63
	Others	9－4	Drive the engine at about 7000rpm for about 3 minutes. Has the white smoke disappeared?	Yes	No 9－5
	Oil consumption	9－5	Is the engine oil consumed over 5cc an hour?	No 9－6	Perform work orders 7-4 or below until the problem of the excess oil consumption is corrected. (Excess oil consumption may cause clouds of white smoke.)
	Unknown cause	9－6	Clouds of white smoke do not come out during operation with the oil consumption at 5cc or less an hour and in normal use. Check again that the equipment has been in operation in an appropriate place and work method. Ask serviceman for further information.		

V. CHECK AND RECONDITIONING

Check and recondition the engine according to the essential criteria for reconditioning after the disassembly and cleaning.
the terms used in the criteria for reconditioning are described below:

1) Reconditioning
To repair, adjust, replace any wrong part of the engine, so that it works like a new one.

2) Required reconditioning
The point at which a part of the engine is thought that it does not function any more without being repaired because of its wear, breakage, and/or decreased function.

3) Usage limit
The point at which a part of the engine can not be used any more because of its poor performance and/or strength.

4) Gauge
The design dimension of new parts exclusive of its permissible dimensional deviation.

5) Adjustment accuracy
The accuracy of finished and/or adjusted dimension of a repaired part of the engine.

VI. CRITERIA FOR RECONDITIONING

Criteria for reconditioning of EH075-type engine

	Part to be repaired	Gauge	Adjustment limit	Usage limit	Remarks	Tool	If not adjustable
CYLINDER BLOCK	Bore diameter	φ51	0.06	0.06		Cylinder gauge	Replacement
	Inside diameter of valve guide	φ4	0.10	0.10	Diameter of central part	Inside micrometer	
PISTON	External diameter of skirt in thrust direction (6.1-14.1mm higher from bottom)	φ50.99	-0.04	-0.04		Micrometer	Replacement
	Width of ring grooves Top 2nd Oil	 1.0 1.0 2.0	+0.06	+0.06		Vernier calipers	Replacement
	PIN hole	φ12	+0.03	+0.03			Replacement
	Gap between PISTON and CYLINDER (6.1-14.1mm higher from bottom)		0.1	0.1	At skirt bottom in piston thrust direction	Cylinder gauge,	Replacement
	Gap between ring grooves and rings Top 2nd Oil		 0.12 0.12 0.20	 0.12 0.12 0.20		Gap gauge	Replacement
	Authorized tally of PISTON and PISTON PIN		0.04	0.04		Micrometer	
PISTON RING	Closed gap Top 2nd Oil		 0.8 0.8 0.8	 0.8 0.8 0.8	Replace when the whole ring working face touches the CYLINDER.	Gap gauge	Replacement
	Width Top 2nd Oil	 1.0 1.0 2.0	 -0.05 -0.05 -0.14	 -0.05 -0.05 -0.14		Micrometer	Replacement
External diameter of PISTON PIN		φ12	-0.012	-0.012			

Part to be repaired		Gauge	Adjustment limit	Usage limit	Remarks	Tool	If not adjustable
CAM GEAR	Height of cam top	28.01	-0.6	-0.6		Vernier calipers	Replacement
	Shaft bore diameter	φ5				Inside micrometer	Replacement
	Cam shaft diameter	φ5				Micrometer	Replacement
	Gap between CAMSHAFT and acceptance hole					Inside micrometer Micrometer	Replacement
Intake/exhaust valve	External diameter of valve shaft Intake Exhaust	φ4.0 φ4.0	-0.10			Micrometer	Replacement
	Gap between valve shaft and valve guide Intake Exhaust		0.2	0.2	At the center of the VALVE GUIDE.	Inside micrometer Micrometer	Replacement
	Valve lift	4.3				Vernier calipers	CAMGEAR replacement
	Valve clearance (in the cold)	0.15	0.08～0.4			Thickness gage	Adjustment
ROCKER ARM	External diameter of rocker shaft	φ5				Micrometer	Replacement
	Diameter of rocker arm hole	φ5				Three-point Micrometer	Replacement
	Gap between rocker arm and rocker shaft					Micrometer Three-point Micrometer	Replacement
Electricity	PLUG SPARK	NGK CMR6A					
	PLUG SPARK Electrode clearance	0.75		1.0		Thickness gage	Adjustment
	Gap between coil and flywheel	0.3				Thickness gage	Adjustment
Fuel consumption l/hr		1.34 ～1.63			On wide open throttle at 7200rpm		
Fuel consumption l		0.22					
Engine oil consumption cc/hr		3	6				Checking
Recommended engine oil		Automotive Oil SAE10W-30; Class SF or higher					
Oil change		1st change: 20h 2nd or later change: 50h					

VII. NOTIC

1) Cleaning of air cleaner element

- Clean the element to avoid an extremely short life as well as poor start, power, and drive of the engine.
- Wipe oil off the air cleaner cover and air cleaner plate breather.

2) Oil supply and change

- Remove dust and dirt around the oil filler, and unscrew the oil gauge integrated oil cap.
- Place the oil gauge integrated oil cap on a place where it can not get dirty with sand and/or dust. The dirty screwed back oil gauge integrated oil cap might cause poor oil circulation and/or ablations of the engine parts resulting in an engine failure.
- Be sure to wipe spilled oil off the space between the fuel tank and engine and start the engine. Operation without wiping the spilled oil causes oil spots because the spilled oil is absorbed from the cooling air intakes and scattered.
- Drained oil should be properly dealt with according to the law. Do not discard squeeze the oil out of them. it in a garbage bag, to the ground, and/or drainage ditches. Ask a store where you have bought the oil for unclear points about the disposal.

Check and/or change the oil periodically (change it once six months). The oil deteriorates naturally.

3) Fuel

- Do not use mixed gasoline (gasoline mixed with the engine oil). The mixed gasoline might cause carbon sedimentation resulting in an engine failure.
- Use of old fuel causes a poor engine start.

4) Operation

- Open the throttle one thirds and start the warmed engine if it cannot easily start again.

5) Storage

- Store the equipment with the engine in an upright position in spite of its storage period.
- Tell your users the correct storage way above.

VIII. CARE AND STORAGE

Care described below shows the standard procedure required at the correct engine use under usual conditions. Therefore, it will not give you any guarantee such that care is not necessary up to the indicated times. An air cleaner cleaning, for example, is necessary every several (not ten) hours a day during operation in a dust-laden environment.

1) Daily check and care (every 10 hours)

Check and care	Reason
① Parts cleaning	(1) The dusty air cleaner element might cause poor engine drive. Also, the oil attached air cleaner element causes not only the inner but also outer parts to be dirty by the oil.
② Test the parts for being not seated. Tighten loose screws again if any.	(2) The parts not seated causes vibration of the engine and/or oil leaks.
③ Test the fuel pipe for coming away and/or bend.	(3) The coming away and/or bent fuel pipe causes a fuel leak and/or poor engine start.
④ Checking and cleaning of the PLUG, SPARK.	(4) The bad PLUG, SPARK causes poor power and/or engine start.
⑤ Check the oil quantity. If short supply supplementary oil. ※	(5) The engine might seize up in operation with lack of the oil.

※A pre-operation check should be done.

2) Check and care after initial 20-hour use

Check and care	Reason
① Oil change	To remove the oil that has initially got dirty.

3) Check and care after every 50-hour use

Check and care	Reason
① Oil change ② Fuel filter cleaning	① The dirty oil accelerates ablation of the parts. ② The dirty fuel filter causes the fuel not to be supplied to the CARBURETOR resulting in a poor engine start.

4) Check and care after every 200-hour

Check and care	Reason
① Check the valve clearance. Adjust the valve clearance if necessary.	(1) Increasing in the amount of clearance causes the descent of the engine power output, resulting in the engine malfunction.
② Decreasing in the engine revolution needs the cleaning of the CYLINDER HEAD after removing it.	(2) The descent of the engine power output results in the engine malfunction.
③ Fuel pipe replacement	(3) A fuel leak is dangerous.

5) Long term nonuse of engine

① Perform procedure 1) and 2).

② Drain the fuel from the TANK, FUEL and CARBURETOR.

③ To prevent rust of the inside of the CYLINDER, pour oil of about 2cc from the CARBURETOR attaching screw hole, pull the RECOIL STARTER starting knob slowly 2 to 3 times, and screw the PLUG, SPARK.

④ Pull the RECOIL STARTER starting knob slowly and stop pulling at the first heavy movement (just before the pressure top dead center).

⑤ Cover the equipment and store it in an upright position in a dustless place.

IX. CHECK,DRAINAGE AND FEEDING OF ENGINE OIL

Recommended oil: Robin genuine oil or SAE10W-30 oil of API type SF grade or better (4 stroke motor oil for automobiles)

Oil capacity: Approximately 0.22 L (220 ml)

1. Checking and Refilling Engine Oil

① Follow the procedure below when the engine oil is cold i.e. the blower has not been running.

- Inspection :Set the blower down on a level surface and remove the oil cap. Verify that the oil level is within the upper and lower limit marks on the oil level gauge. If the oil is not up to the 100mL level, fill up with new oil.
- Adding Oil :Set the blower down on a level surface and remove the oil cap. Fill the oil up to the upper limit of the oil level gauge.

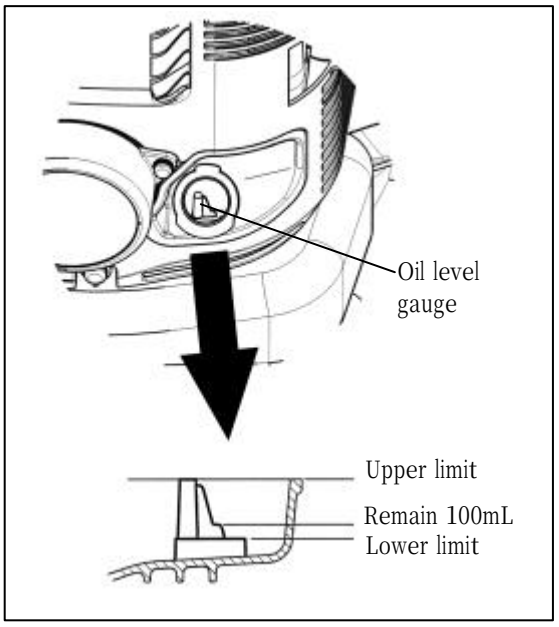

2. Oil Change Procedure

① Set the blower down on a level surface.

② Place a waste oil container under the drainage hole (1) to catch the oil as it drains out. The container should have a capacity of at least 220 ml to be able to catch all of the oil.

③ Loosen the oil drain bolt (2) to let the oil drain out. Be careful not to allow oil to get on the fuel tank or other parts.

④ Remove the oil cap. (Removing the oil cap allows the oil to drain easily.)

⑤ As the level of the oil being drained decreases, tilt the blower over on to the side with the drain so that the oil will completely drain out.

⑥ After the oil has completely drained out, tighten the oil drain bolt securely. If the bolt is not tightly fastened, this may result in an oil leak.

⑦ Adding oil during the oil change procedure is performed in the same manner as the separately explained procedure for adding oil whenever the level is insufficient. Always add oil by filling from the opening under the oil cap. (Specified oil level: Approximately 220 mL)

⑧ After filling with oil, tighten the oil cap securely to prevent oil leaks.

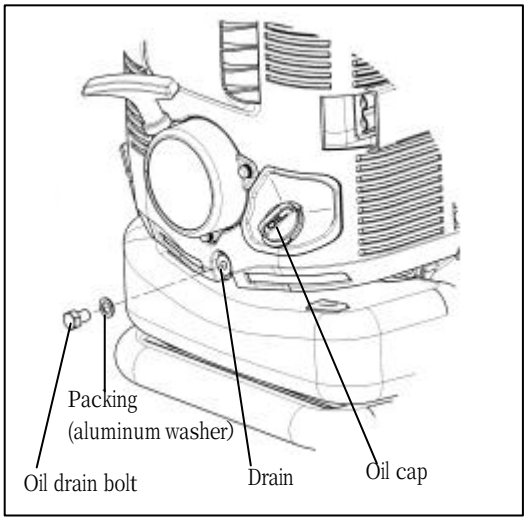

X. VALVE CLEARANCE ADJUSTMENT

NO.	Part name	Instructions
1	COVER,ENGINE GUARD,OIL STARTER	(1) Remove the GUARD,OIL. (2) Remove the STARTER. (3) Remove the COVER,ENGINE. 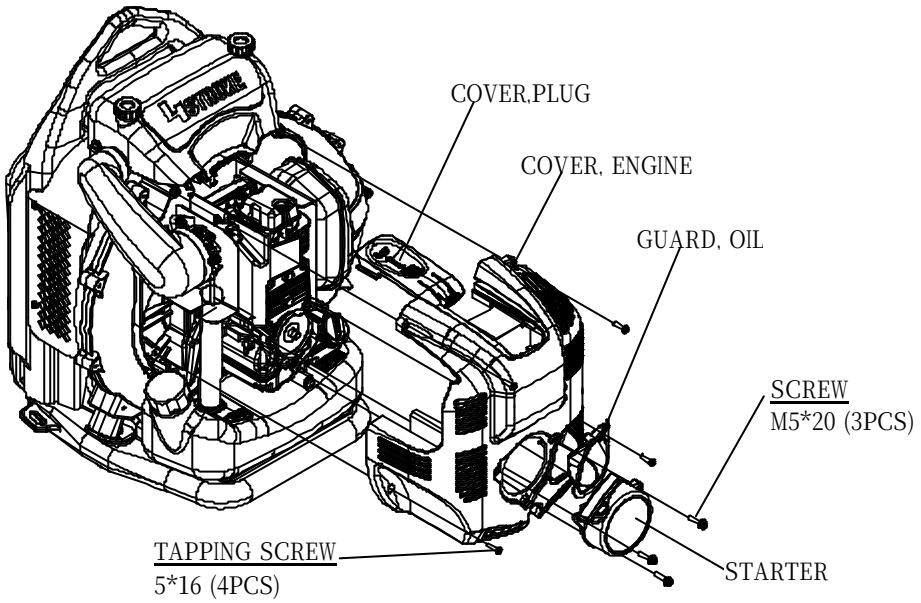
2	TANK,FUEL	(1) Remove the fuel tube. Notice:The fuel will spout if the fuel tube is removed with the TANK,FUEL filled with fuel. (2) Remove the TANK,FUEL. 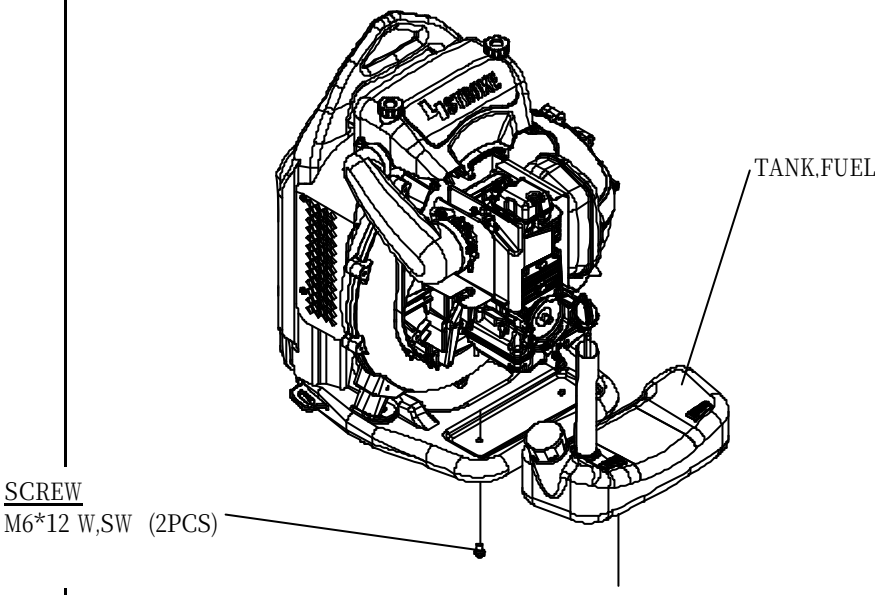

NO.	Part name	Instructions
3	ROCKER COVER	(1) Remove the ROCKER COVER.
4	VALVE CLEARANCE ADJUSTMENT Adjust VALVE clearance at the compression top dead center	(1) Position the PISTON to the compression top dead center. 1) Rotate the CRANKSHAFT clockwise holding the PULLEY by the hand until the position of the FLYWHEEL counter marks and CRANKCASE come in a horizontal position. (Removing the PLUG, SPARK will allow the smooth rotation.) After this: 2) Make sure that, by watching the INTAKE VALVE movement, the VALVE is moved back to the original position before the EXHAUST VALVE slightly moves (the confirmation is completed). 3) Even if the two counter marks and the CRANKCASE come in a horizontal position, where this happens before the EXHAUST VALVE moves to a large degree, or the INTAKE VALVE moves when rotating the crankshaft clockwise slightly, then rotate the CRANKSHAFT clockwise again holding the PULLEY by the hand (the confirmation is completed). (2) Loosen NUT and adjust VALVE CLEARANCE by rotating ADJUST SCREW with a hexagon bar wrench. VALVE CLEARANCE 0.15mm (3) Tighten NUT firmly after the adjustment. Tightening torque 50^{+15}_{0} kgf·cm (4) Fasten the nuts and screws according to the corresponding specified tightening torque when reassembling. Replace the old rocker cover gasket with the new one, if needed.

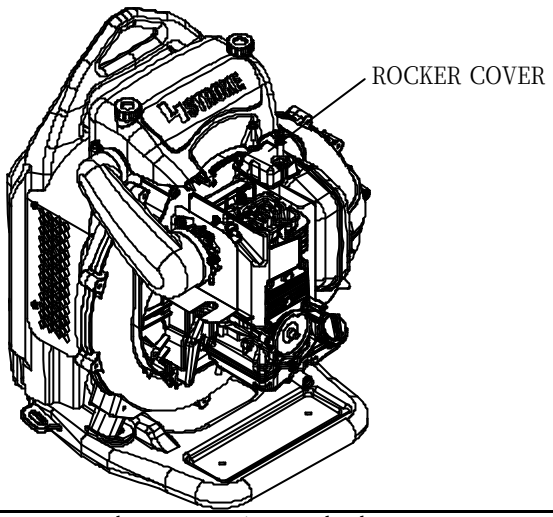

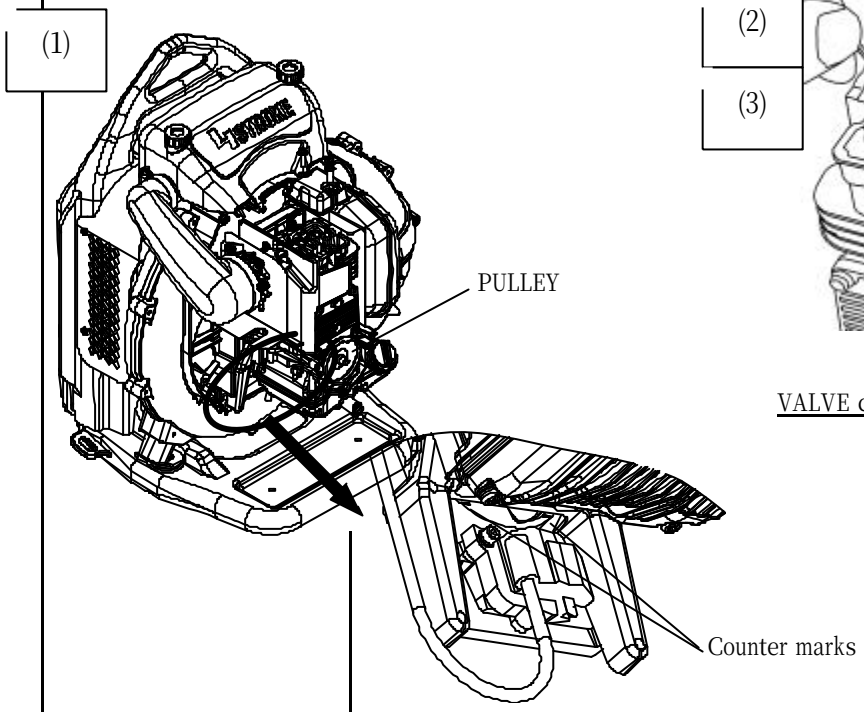

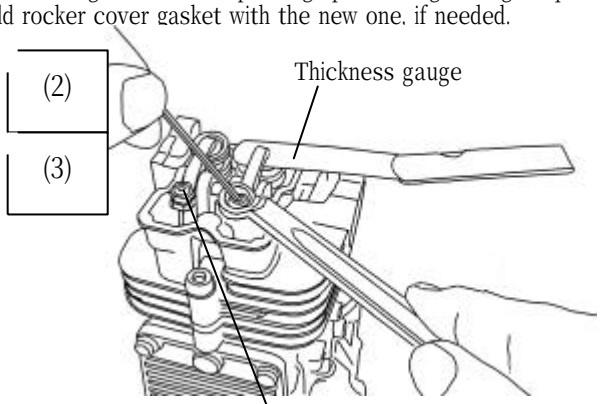

VALVE clearance0.15mm

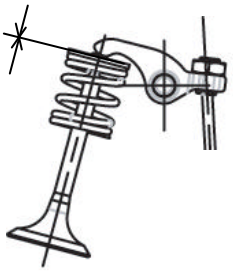

X I . AIR CLEANER CLEANING

NO.	Part name	Instructions
1		**Interval of Cleaning and Inspection: Daily (every 10 operating hours)** (1) Loosen the KNOB BOLT. (2) Remove the COVER, AIR CLEANER. (3) Take out the ELEMENT and remove any dirt with the brush. **NOTE:** The ELEMENT is a dry type and should not get wet. Never wash with water. (4) Replace the ELEMENT with a new one if it is damaged or very dirty. (Part No. 6676500201: ELEMENT, AIR CLEANER) (5) Wipe off any oil that has come in to contact with the breather with a rag or cloth. (6) Install the ELEMENT in the cleaner case. (7) Attach the COVER, AIR CLEANER and tighten the KNOB BOLT.